HiFi ENGINE®

For more Hi-Fi manuals and set-up information
please visit www.hifiengine.com

ST-JX2L

AEP Model
UK Model

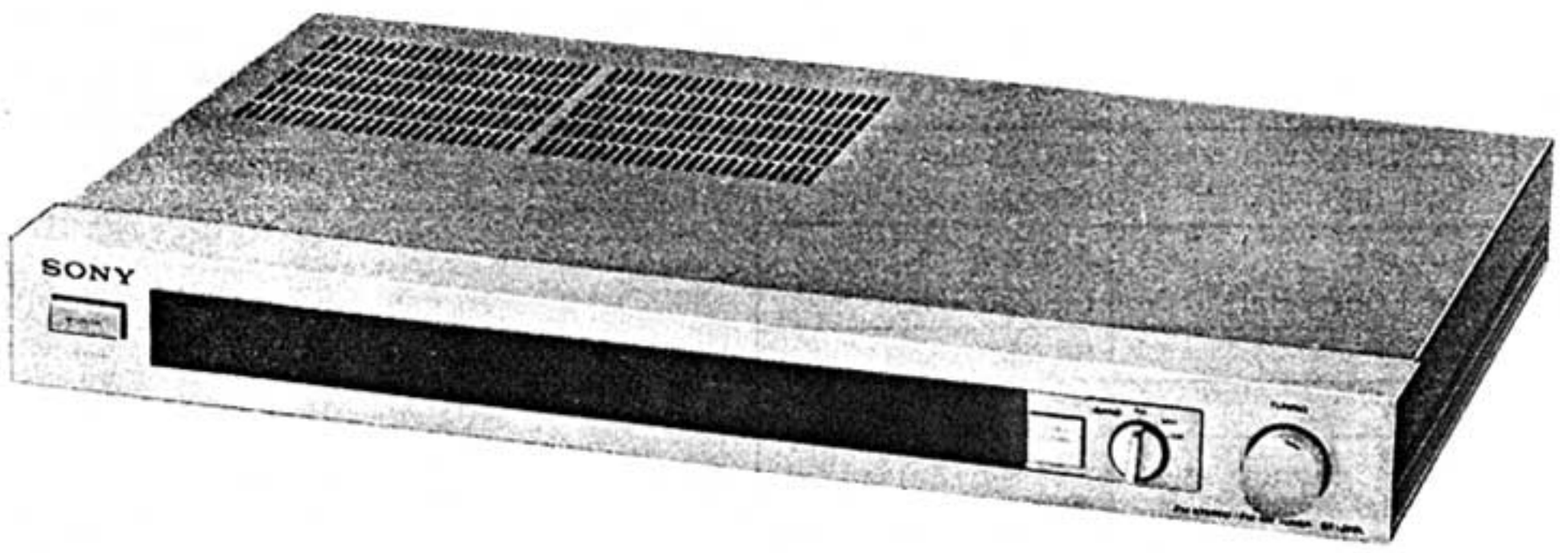

FM STEREO/FM-AM TUNER

SPECIFICATIONS

FM TUNER SECTION

Tuning Range:	87.5 MHz – 108 MHz
Antenna Terminals:	300 Ω balanced 75 Ω unbalanced
Intermediate Frequency:	10.7 MHz
Sensitivity:	at 46 dB quieting (at 40 kHz deviation) 17.3 dBf, 4 μV (mono) 38.3 dBf, 45 μV (stereo)
Usable Sensitivity:	10.3 dBf, 1.8 μV (IHF) 1.7 μV (S/N 26 dB, 40 kHz deviation)
Signal-to-noise Ratio:	78 dB (mono), 72 dB (stereo)
Harmonic Distortion: (40kHz deviation)	0.15 % (mono), 0.25 % (stereo) at 1 kHz
IM Distortion (40kHz deviation):	0.15 % (mono), 0.25 % (stereo)
Separation: (at 1 kHz)	45 dB
Frequency Response:	40 Hz – 12.5 kHz ± 0.5 dB 30 Hz – 15 kHz $^{+0.5}_{-2}$ dB
Selectivity:	at 300 kHz 55 dB
Capture Ratio:	1.0 dB
AM Suppression Ratio:	54 dB
Image Response Ratio:	50 dB
IF Response Ratio:	90 dB
Spurious Response Ratio:	70 dB
RF Intermodulation:	60 dB (IHF)
Muting Threshold:	approx. 25.2 dBf, 10 μV
Output Level/Impedance:	at 75 kHz deviation 750 mV/1 kΩ

– Continued on next page –

SAFETY-RELATED COMPONENT WARNING!!

COMPONENTS IDENTIFIED BY SHADING AND MARK ⚠ ON THE SCHEMATIC DIAGRAMS, EXPLODED VIEWS AND IN THE PARTS LIST ARE CRITICAL TO SAFE OPERATION. REPLACE THESE COMPONENTS WITH SONY PARTS WHOSE PART NUMBERS APPEAR AS SHOWN IN THIS MANUAL OR IN SUPPLEMENTS PUBLISHED BY SONY.

SONY®
SERVICE MANUAL

MW/LW TUNER SECTION

		MW	LW
Tuning Range		522 kHz – 1,602 kHz	150 kHz – 350 kHz
Antenna	built-in antenna	provided	provided
	external antenna terminal	provided	provided
Intermediate Frequency		450 kHz	450 kHz
Usable Sensitivity	built-in antenna	200 μV/m (at 1,000 kHz)	300 μV/m (at 230 kHz)
	external antenna	100 μV (at 1,000 kHz)	100 μV (at 230 kHz)
Signal-to-noise Ratio		54 dB	54 dB
Harmonic Distortion		0.3 %	0.3 %
Selectivity		35 dB (9 kHz)	35 dB (9 kHz)

GENERAL

System: FM stereo, FM/AM superheterodyne tuner

Power Requirements: AEP model: 220 V ac
UK model: 240 V ac
50/60 Hz

Power Consumption: 12 W

Dimensions: Approx. 430 (w) x 55 (h) x 310 (d) mm
(17 (w) x 2¼ (h) x 12¼ (d) inches)
including projecting parts and controls

Weight: Approx. 3.1 kg (6 lb 14 oz), net
Approx. 3.7 kg (8 lb 3 oz), in shipping carton

MODEL IDENTIFICATION

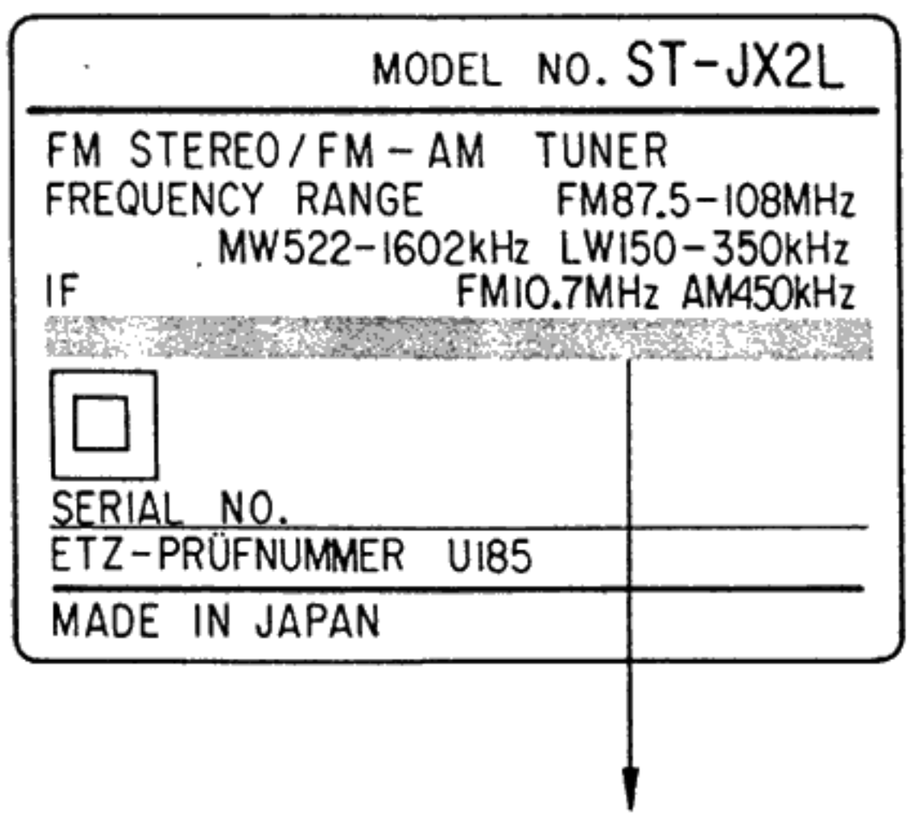

AEP model: AC 220V ~ 50/60Hz 12W
UK model: AC 240V ~ 50/60Hz 12W

MELF (Metal Electodes Face-Bonding) Components

Warning

If MELF components are forcibly removed from the printed circuit board with pincers or pliers, the circuit board pattern is likely to peel away. Always remove MELF components according to the procedure described on the next page. Replace MELF components with the lead type components.

MELF components are soldered directly to the surface of the printed circuit board.

MELF resistors and capacitors have the same dimensions and are distinguished by their background colors: light brown for resistors, and pink or light green for capacitors.

The MELF resistor color coding is the same as for conventional resistors, and MELF capacitor color coding is the same as for tube-type ceramic capacitors. Note, however, that all MELF resistors are rated at ¼W and ±5%.

Components larger than resistors and without a color code are cross conductors, which are used instead of jumper wires.

1. Structure

(Resistors)

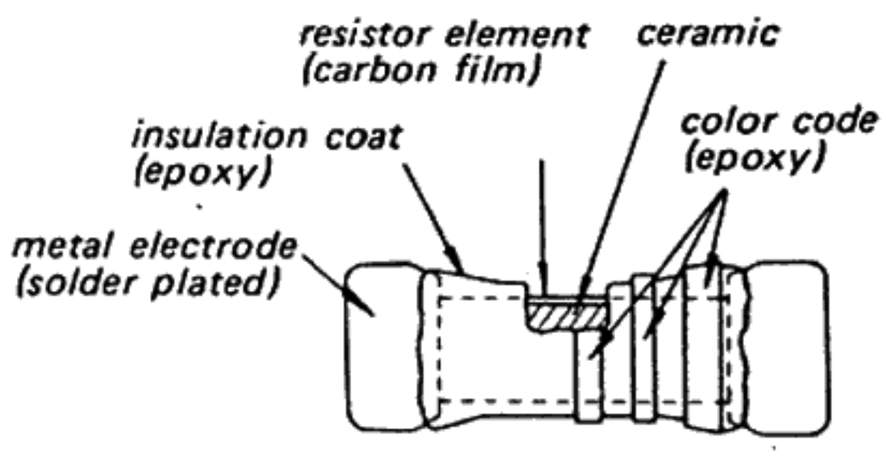

(Capacitors)

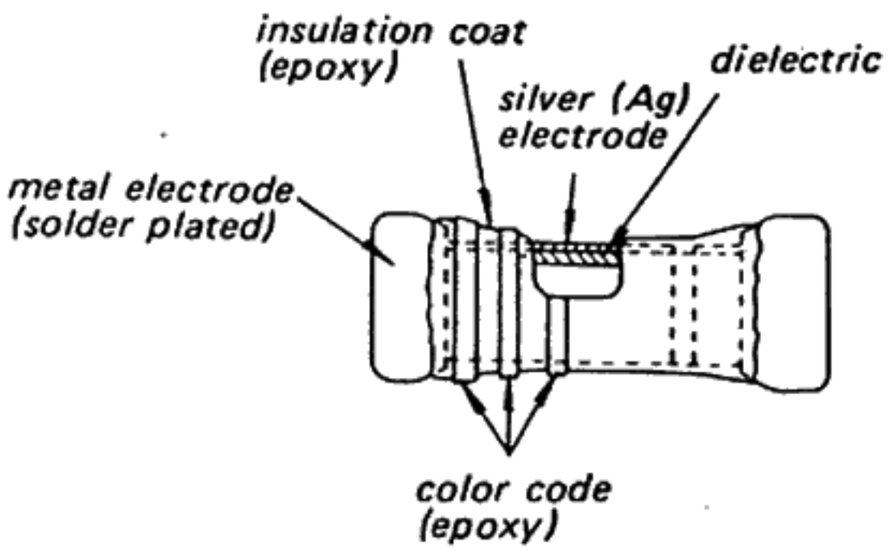

Fig. 1

2. Color Code Reading

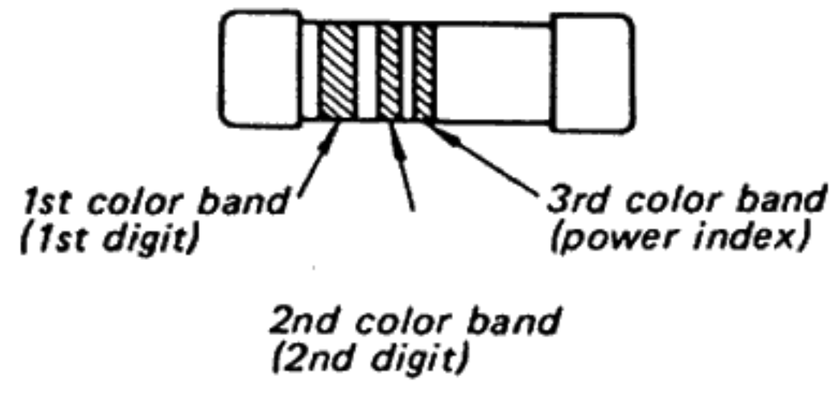

(Example of Resistor)

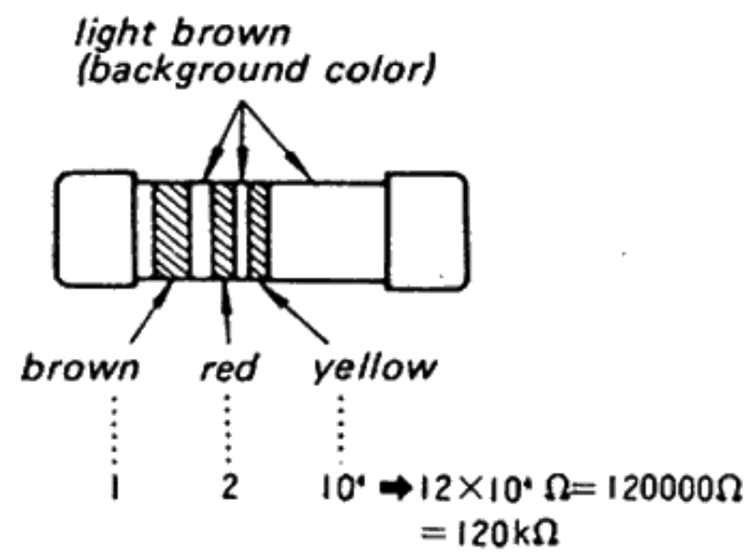

(Example of Capacitor)

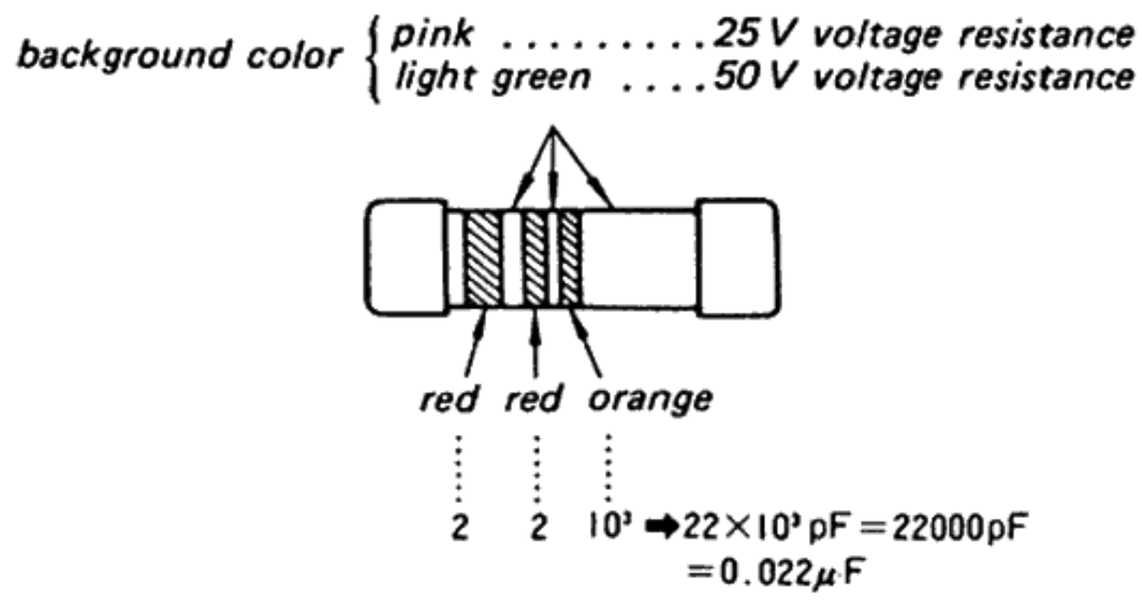

Fig. 2

3. How to Remove MELF Components and Mount Replacements

Use a soldering iron of at least 40W with an iron tip 4 mm in diameter and file the tip down to the angle shown in the diagram.

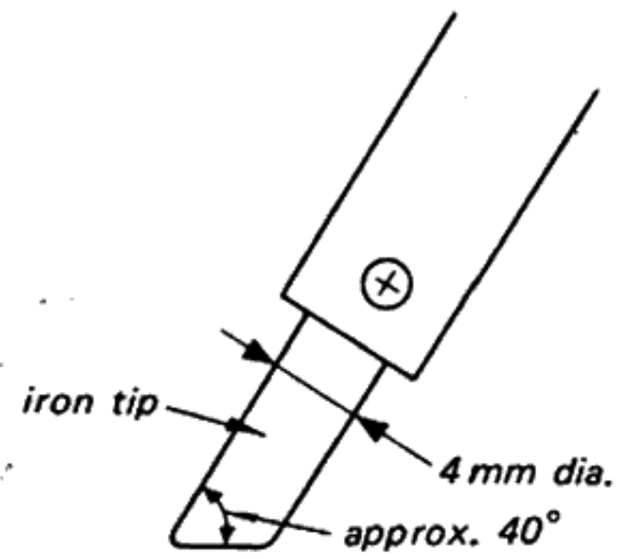

Fig. 3

1. Bring the flat surface of the soldering iron in equal contact with both soldered ends of the component.
2. The solder should melt in about 4 seconds. (The solder will melt more readily if a small amount of solder is attached to the iron tip and the iron tip is placed against the component.)
3. Once the solder has melted, tap the component aside with the tip of the soldering iron, and remove it from the board.

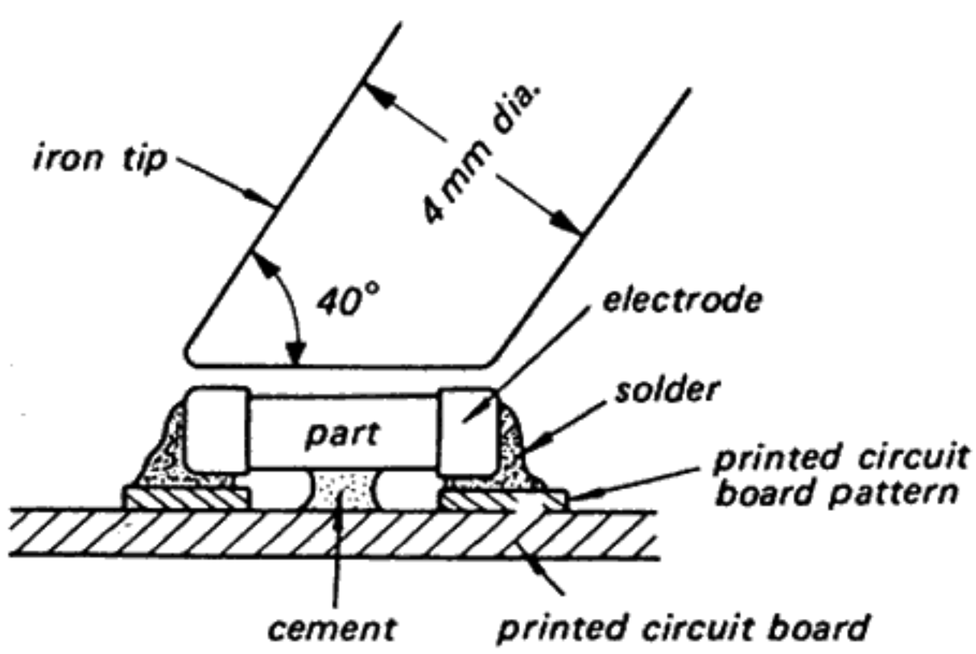

Fig. 4

4. Use lead type resistors or capacitors to replace the MELF components.
   These replacements may be mounted either with short leads (see Fig. 5), or by covering a lead with tubing (see Fig. 6).

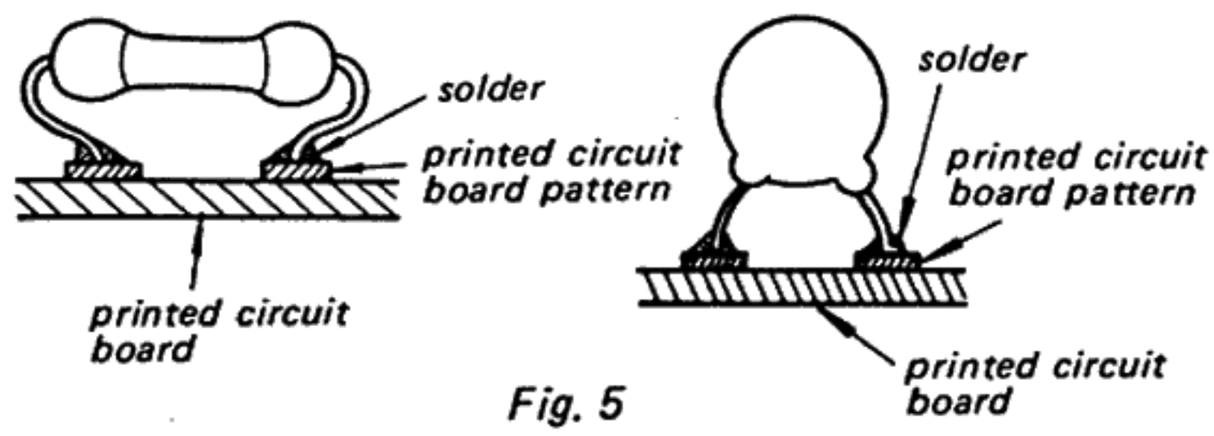

Fig. 5

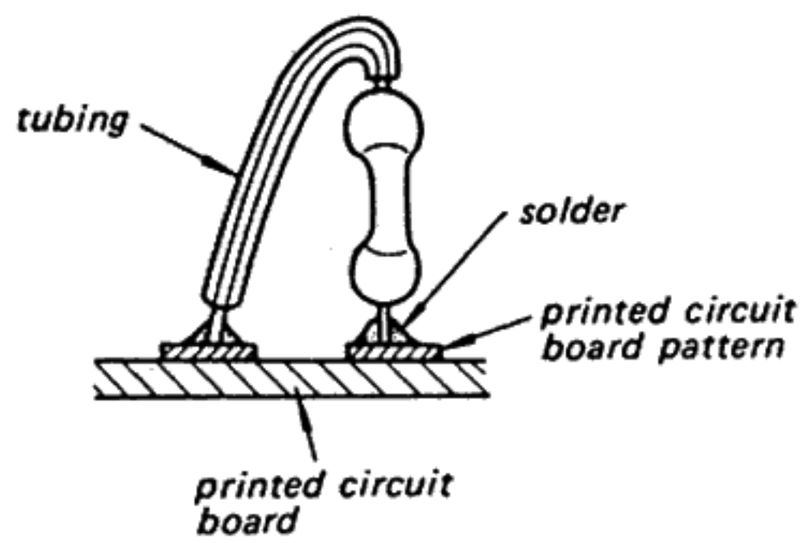

Fig. 6

SECTION 1
OUTLINE

BLOCK DIAGRAM

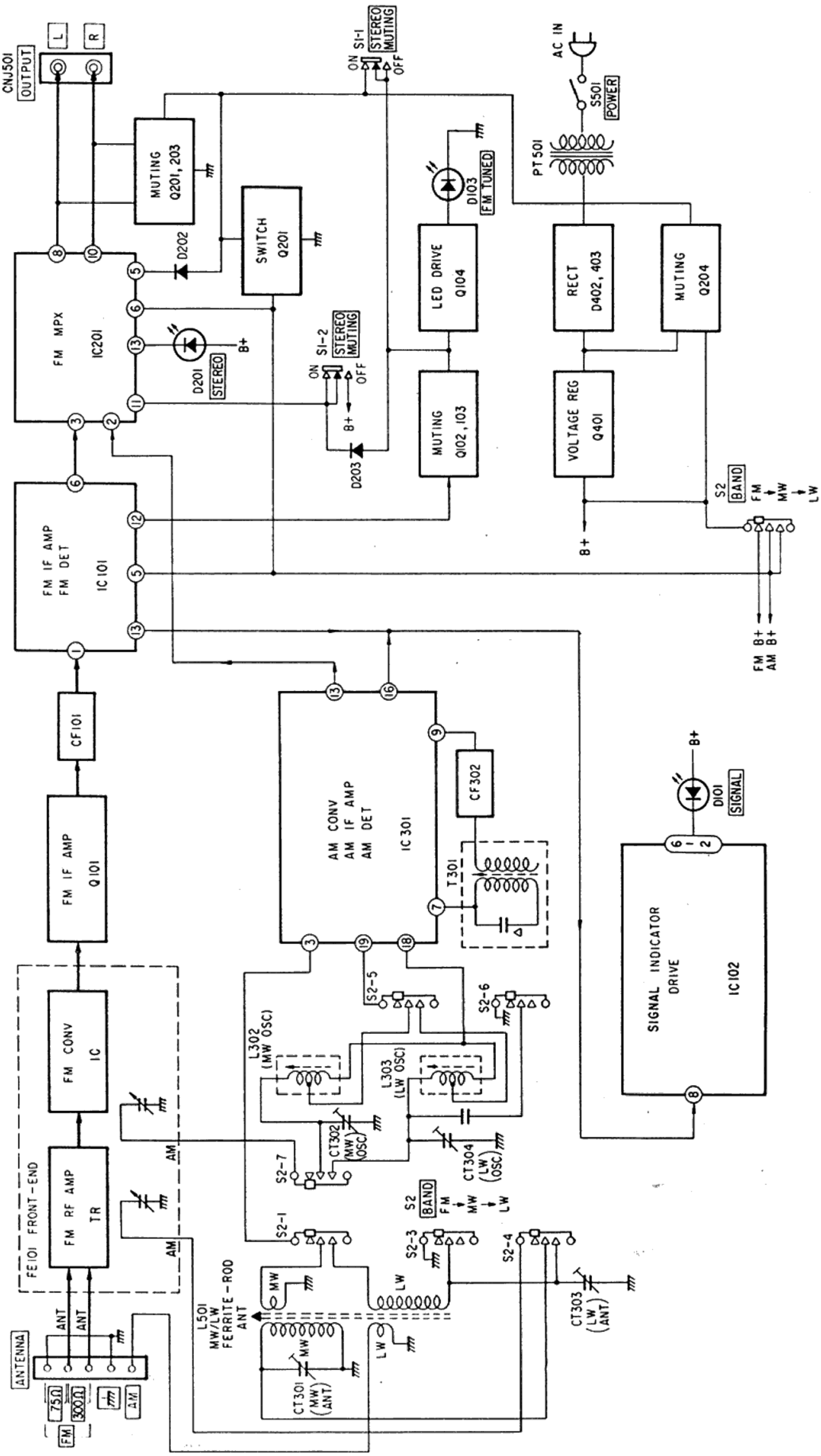

SECTION 2
DISASSEMBLY

Note: Follow the disassembly procedure in the numerical order given.

CASE

Tuner board can be checked in this condition.

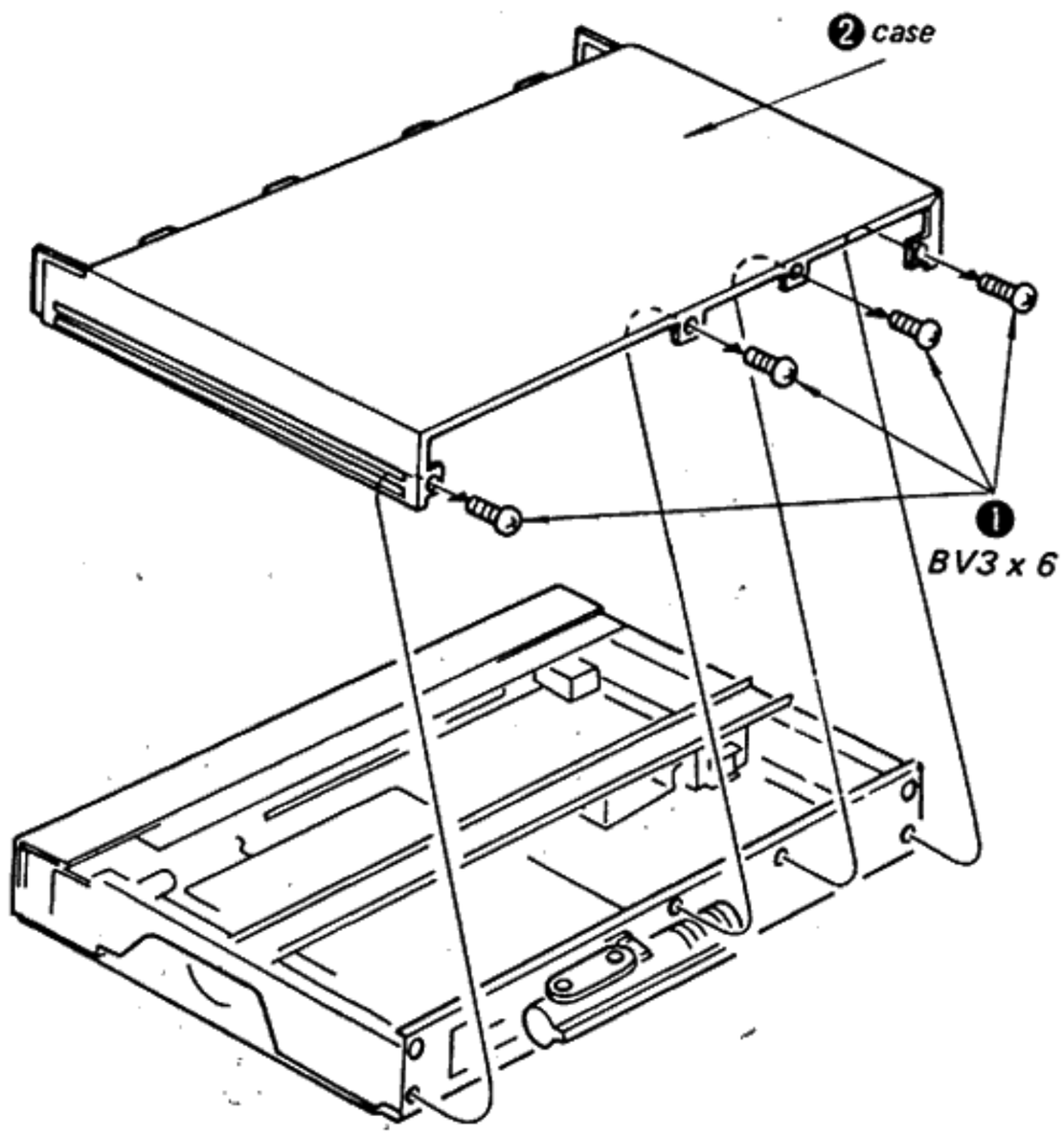

BOTTOM PLATE

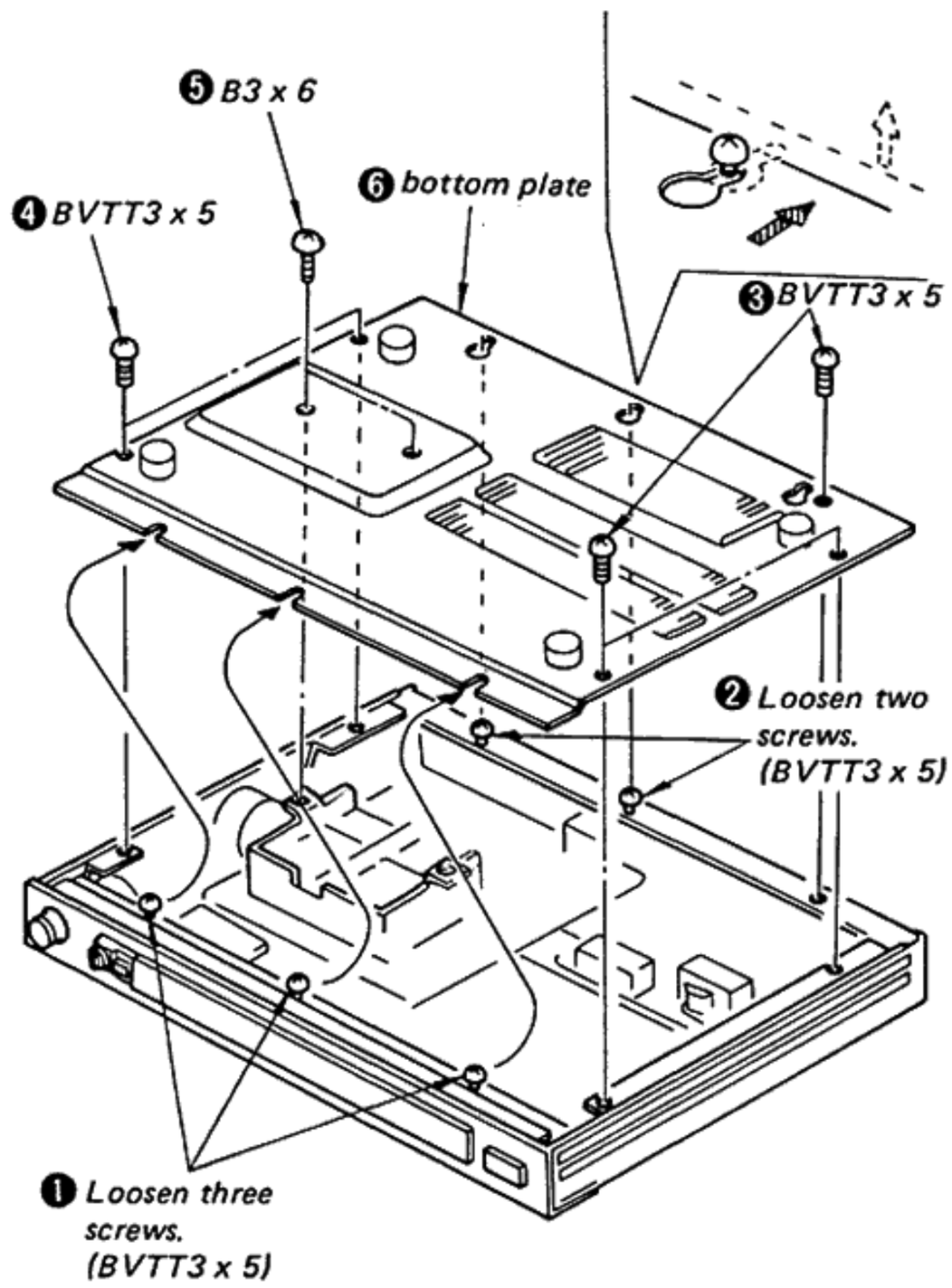

PANEL

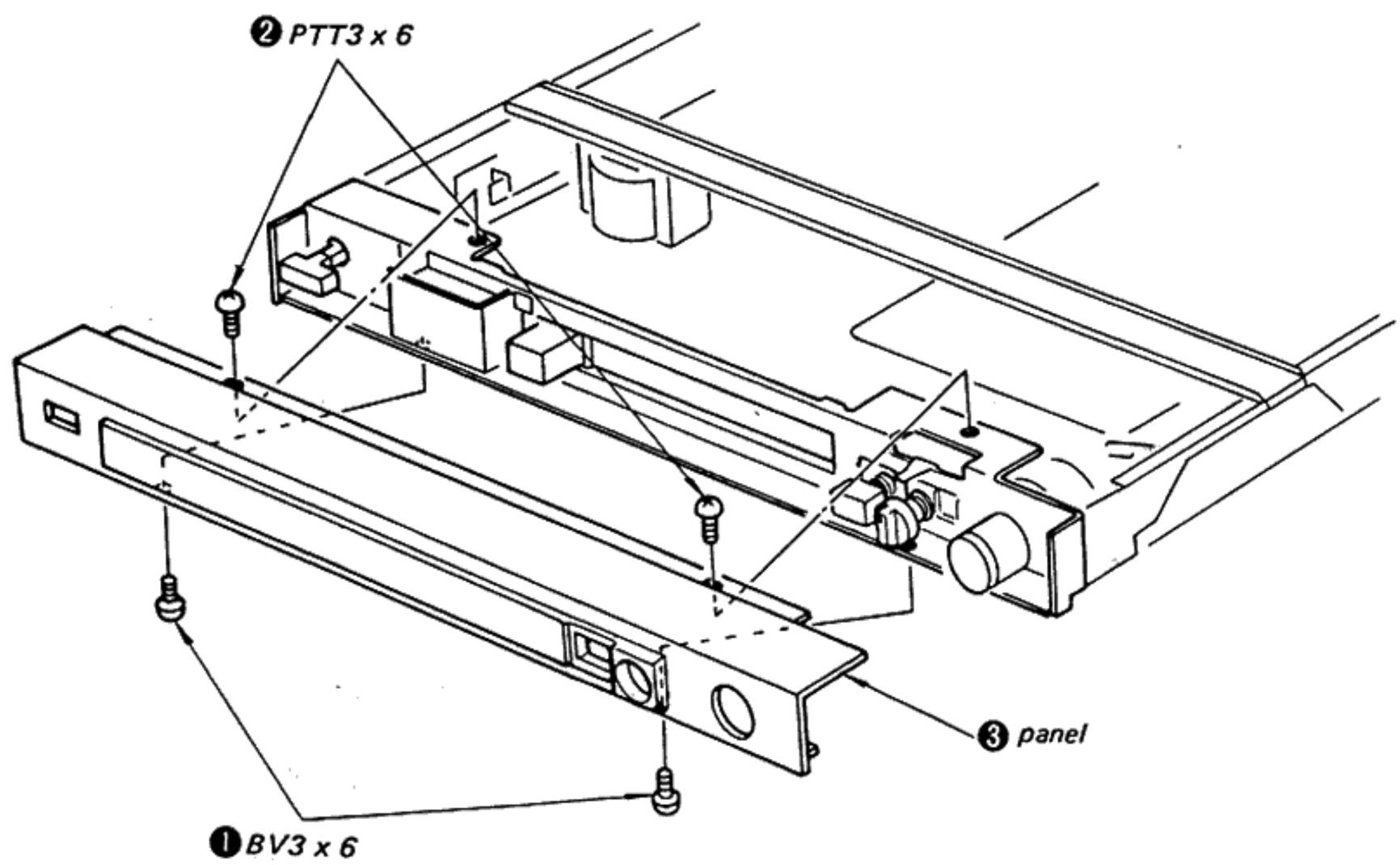

DIAL CORD STRINGING

1. Preparation

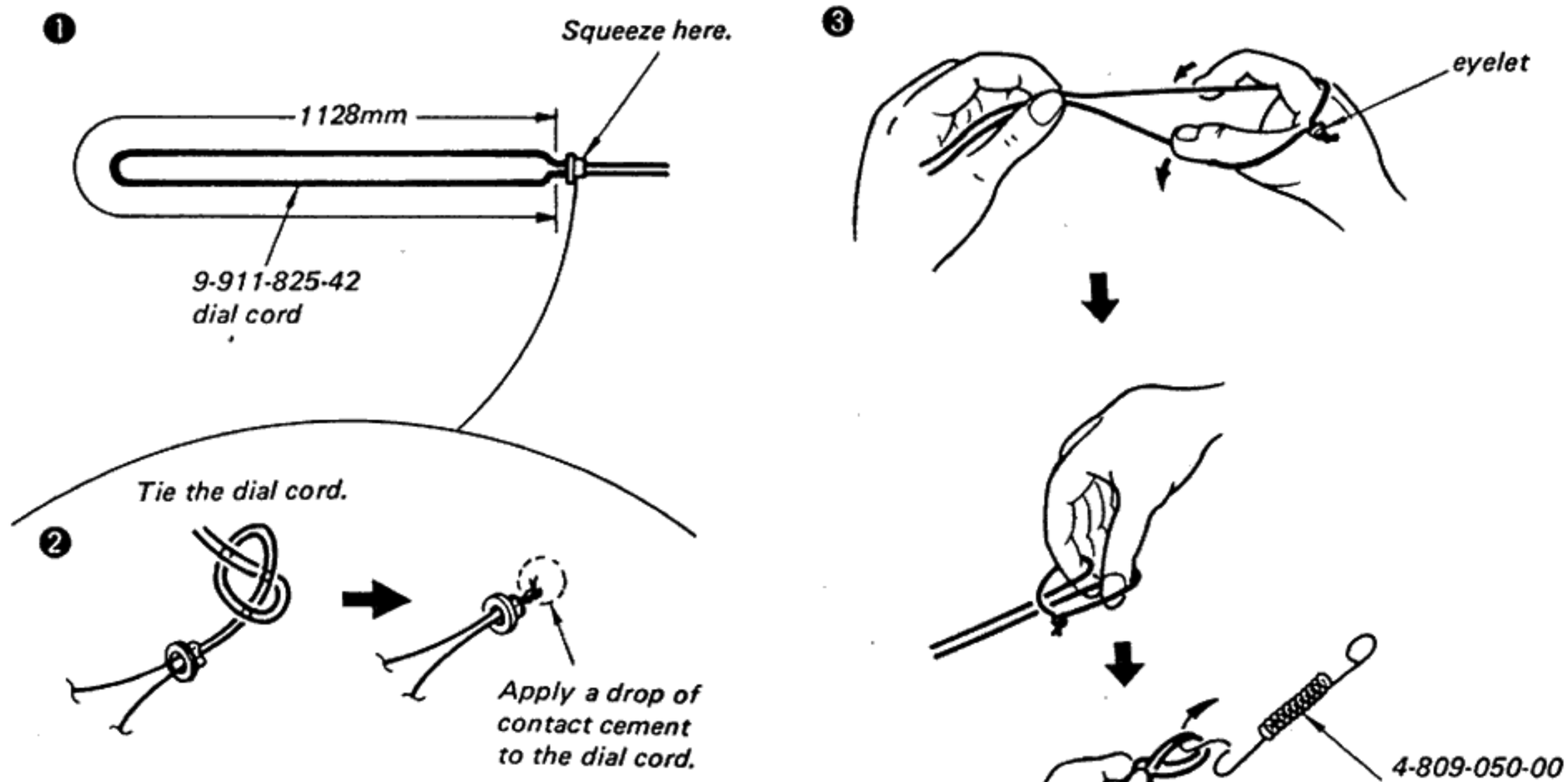

2. Stringing

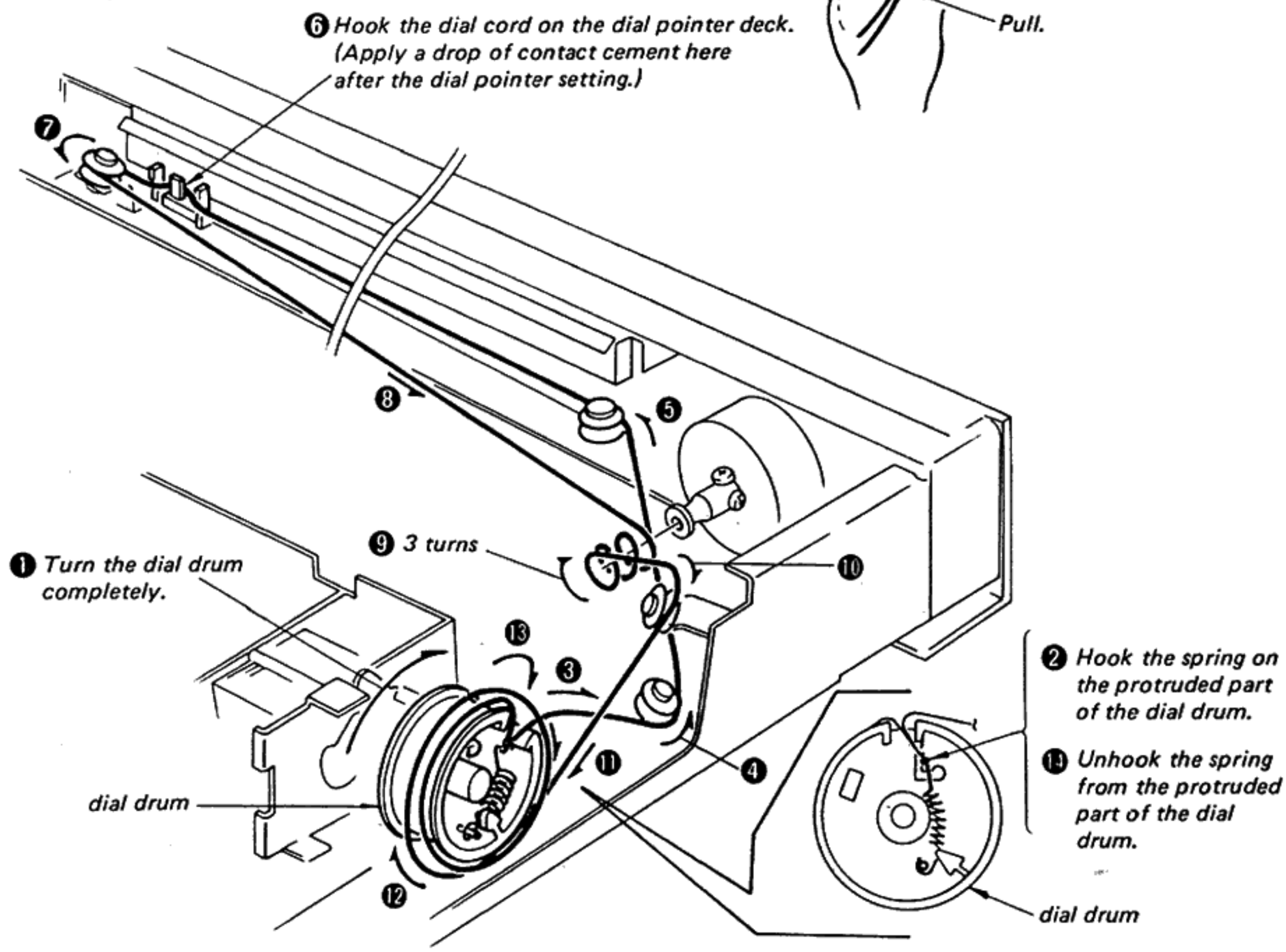

3. Dial Pointer Setting

- Receive the signal (98MHz) from the FM RF SSG and set the dial pointer to 98MHz on the dial scale.
- Apply a drop of contact cement to the dial pointer.

SECTION 3
ADJUSTMENTS

AM SECTION

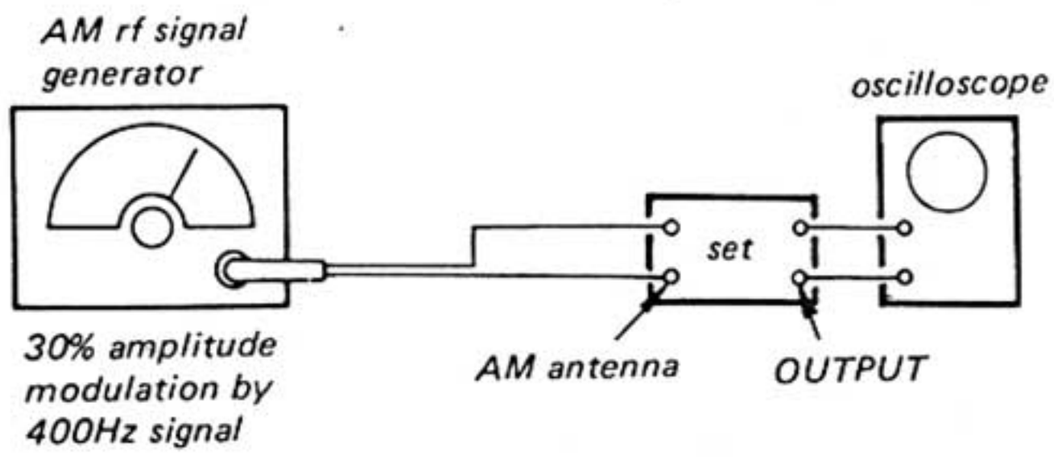

Output level: as low as possible

- Repeat each adjustment several times for maximum reading on oscilloscope.
- The MW/LW tuning adjustments and the tracking adjustments should be finally done by the trimmer capacitor.

MW TUNING ADJUSTMENT

Make sure of the dial pointer setting before this adjustment. (Refer to the dial pointer setting page 7.)

adjustment parts	dial pointer indication	frequency of the signal generator
L302	600kHz	600kHz
CT302	1,400kHz	1,400kHz

LW TUNING ADJUSTMENT

Make sure of the dial pointer setting before this adjustment. (Refer to the dial pointer setting page 7.)

adjustment parts	dial pointer indication	frequency of the signal generator
L303	170kHz	170kHz
CT304	310kHz	310kHz

LW TRACKING ADJUSTMENT

adjustment parts	frequency of the signal generator
L501	170kHz
CT303	310kHz

MW TRACKING ADJUSTMENT

Perform this adjustment after the LW tracking adjustment.

adjustment parts	frequency of the signal generator
L501	600kHz
CT301	1,400kHz

IF ALIGNMENT

adjustment part	frequency of the signal generator
T301	1,000kHz

The FM front-end is carefully adjusted at the factory and is supplied as one whole block for replacement. In case of replacement, perform the following adjustments.

1. Front-End IFT Adjustment.

Setting:

STEREO MUTING switch (S1-1): OFF

Procedure:

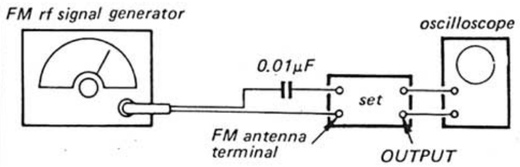

Carrier frequency: *98MHz*
Modulation: *1kHz, 40kHz deviation (100%)*
Output level: *2μV (6dB)*

Adjust T so that the noise levels at the peak of the waveforms on the oscilloscope are symmetrical and the output level is maximum.

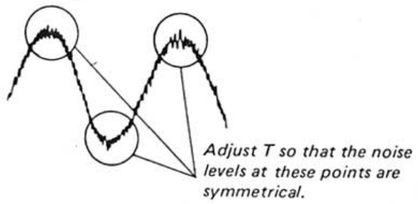

2. Dial Pointer Setting
(Refer to Dial Pointer Setting page 7.)

3. MW/LW Tuning Adjustments
(Refer to MW/LW Tuning Adjustments page 8)

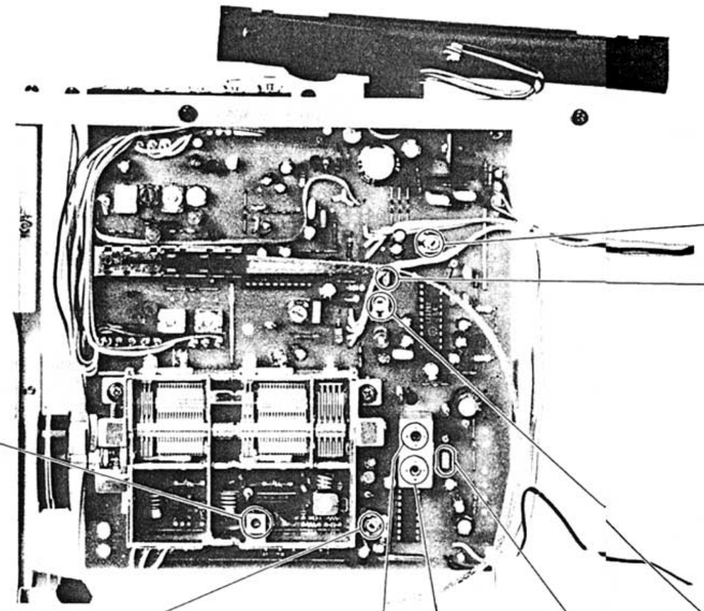

FM Muting Level Adjustment

Setting:

STEREO MUTING switch (S1-1): ON

Procedure:

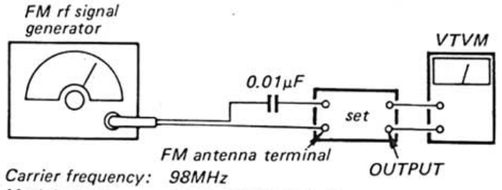

Carrier frequency: *98MHz*
Modulation: *1kHz, 40kHz deviation (100%)*
Output level: *10μV (20dB)*

1. Turn the set to 98MHz.
2. Set the output level of the FM rf signal generator to 20dB (10μV).
3. Turn RT101 and stop it just when the VTVM indication suddenly decreases.

FM Discriminator Alignment

Procedure:

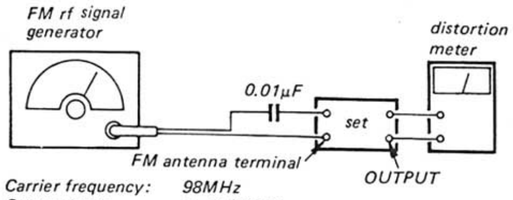

Carrier frequency: *98MHz*
Output level: *1mV (60dB)*
Modulation: (100%) *1kHz, 40kHz deviation*
Mode: *mono*

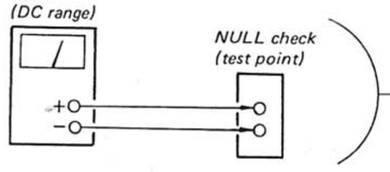

1. Tune the set to 98MHz.
2. Connect a VOM to NULL CHECK (test point) and adjust the primary-side core (red) of T101 for 0V DC reading on the VOM.
3. Adjust the secondary-side core (black) of T101 for a minimum reading on the distortion meter.

Note: Repeat the secondary-side and primary-side adjustments several times.

FM Stereo Separation Adjustment

Setting:

STEREO MUTING switch (S1-1): ON

Procedure:

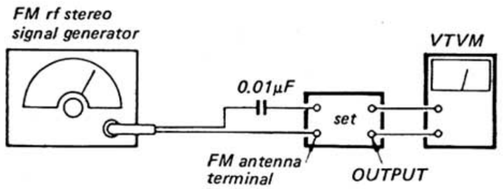

Carrier frequency: *98MHz*
Output level: *1mV (60dB)*
Mode: *stereo*
Modulation:
Audio (1kHz): *16.25kHz deviation (45%)*
Pilot (19kHz): *7.5kHz deviation (10%)*
Sub-channel (38kHz): *16.25kHz deviation (45%)*

FM stereo signal generator output channel	VTVM connection	VTVM reading (dB)
L-CH	L-CH	Ⓐ
R-CH	L-CH	Ⓑ Adjust RT201 for minimum reading.
R-CH	R-CH	Ⓒ
L-CH	R-CH	Ⓓ Adjust RT201 for minimum reading.

L-CH Stereo Separation: Ⓐ – Ⓑ
R-CH Stereo Separation: Ⓒ – Ⓓ

The separations of both channels should be equal.

VCO Adjustment

A) Regular Method

Procedure:

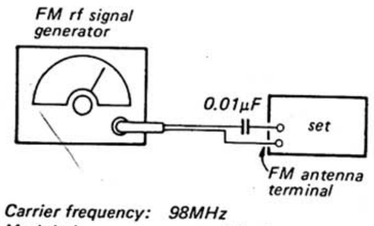

Carrier frequency: *98MHz*
Modulation: *no modulation*
Output level: *1mV (60dB)*

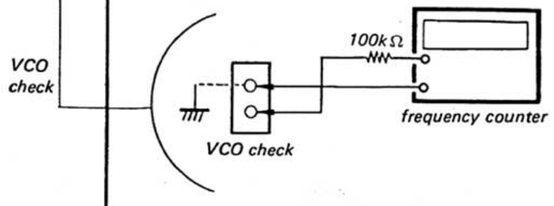

B) Simple Method

Procedure:

1. Tune the set to the FM stereo broadcasting signal.
2. Turn RT202 clockwise or counterclockwise and memorize the lighting-up range of the stereo lamp.
3. Secure RT202 at the center of the lighting-up range of both turns as shown below.

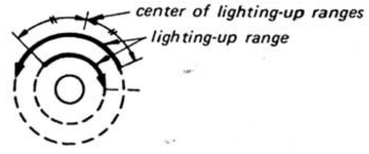

1. Tune the set to 98MHz.
2. Adjust RT202 for 19kHz ± 50Hz on the counter.

4-1. MOUNTING DIAGRAM
– Conductor Side –

- See page 16 for IC101, 102, 201 and 301 block diagram.
- See page 17 for semiconductors.

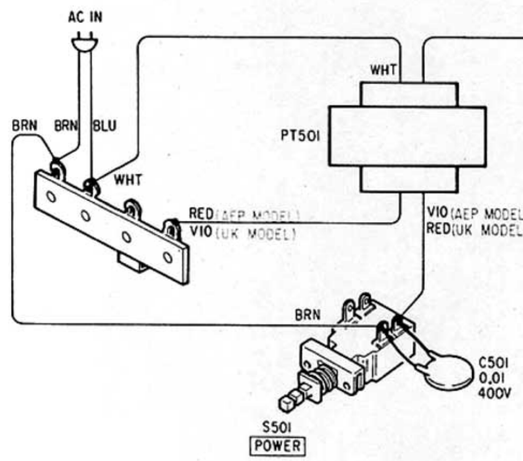

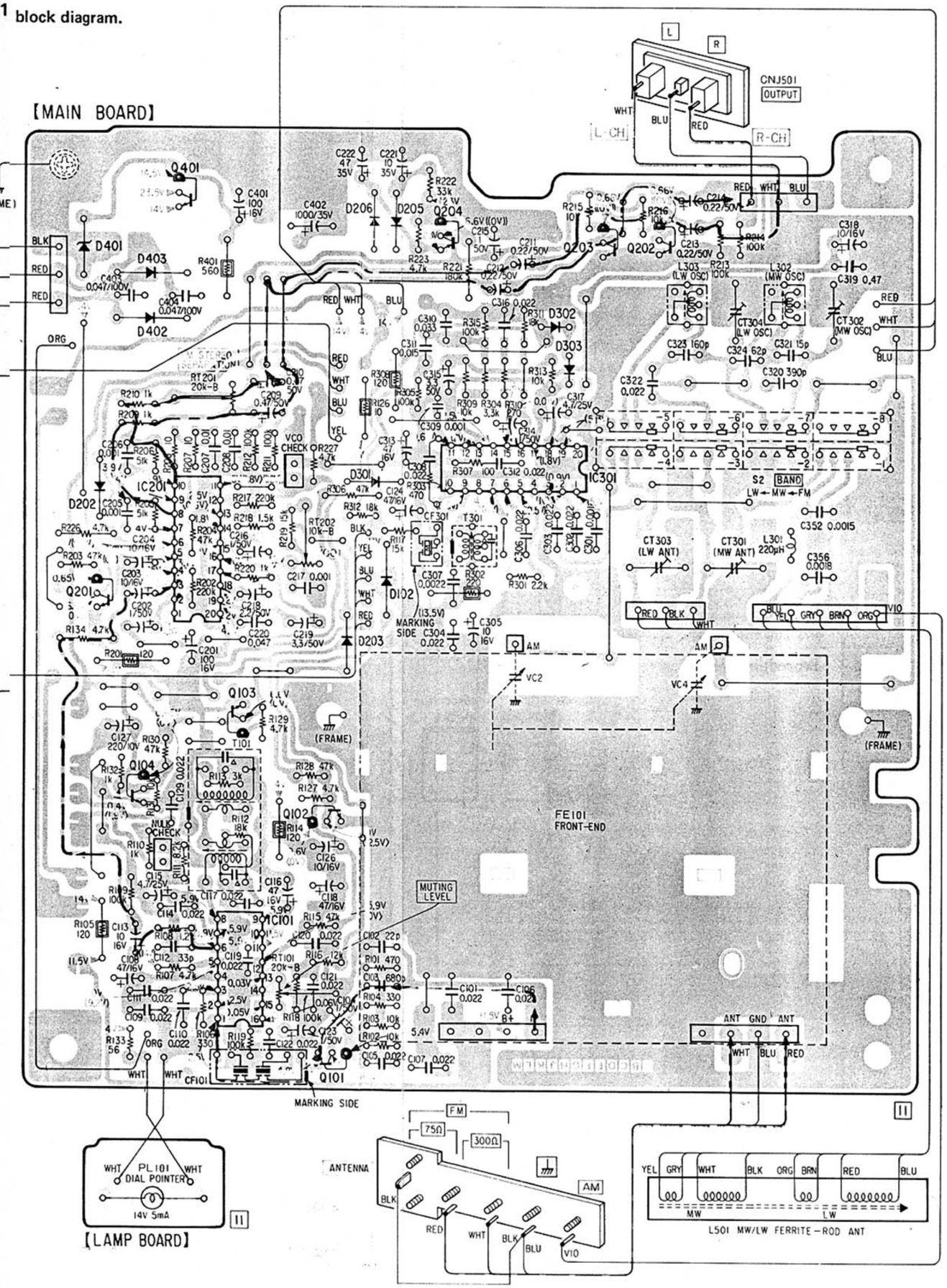

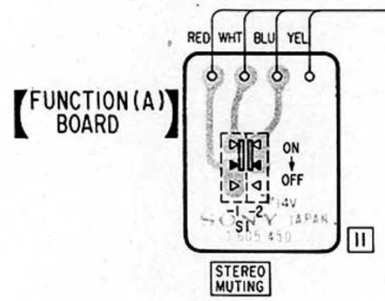

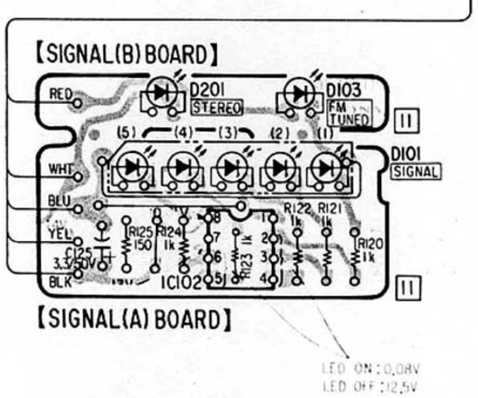

Q, IC	D
401	
204	205 206
202 203	401 403
	302
	402 303
IC301 IC201	301 202
201	102
	203
103	
104	
102	
IC101	
101	
Q, IC	D

Note:

- : indicates side identified with part number.
- : B+ pattern
- : signal path
- : L-CH signal path
- : R-CH signal path

4-2. SCHEMATIC DIAGRAM

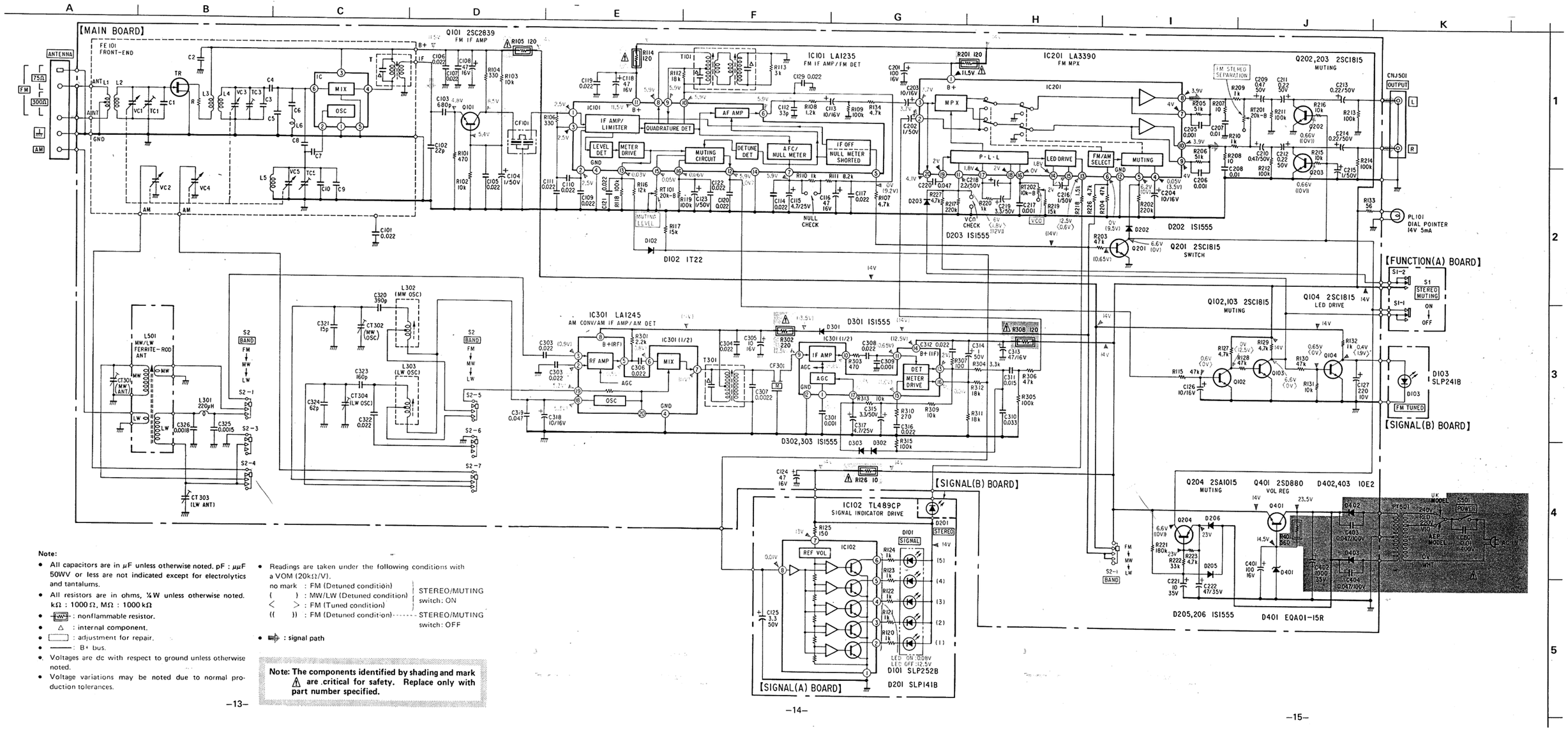

Note:

- All capacitors are in μF unless otherwise noted. pF : μμF 50WV or less are not indicated except for electrolytics and tantalums.
- All resistors are in ohms, ¼W unless otherwise noted. kΩ : 1000 Ω, MΩ : 1000 kΩ
- ⚠ : nonflammable resistor.
- △ : internal component.
- ▭ : adjustment for repair.
- —— : B+ bus.
- Voltages are dc with respect to ground unless otherwise noted.
- Voltage variations may be noted due to normal production tolerances.

- Readings are taken under the following conditions with a VOM (20kΩ/V).
  - no mark : FM (Detuned condition)
  - ( ) : MW/LW (Detuned condition)
  - < > : FM (Tuned condition)
  - (( )) : FM (Detuned condition)
  - STEREO/MUTING switch: ON
  - STEREO/MUTING switch: OFF
- ➡ : signal path

Note: The components identified by shading and mark ⚠ are critical for safety. Replace only with part number specified.

IC101

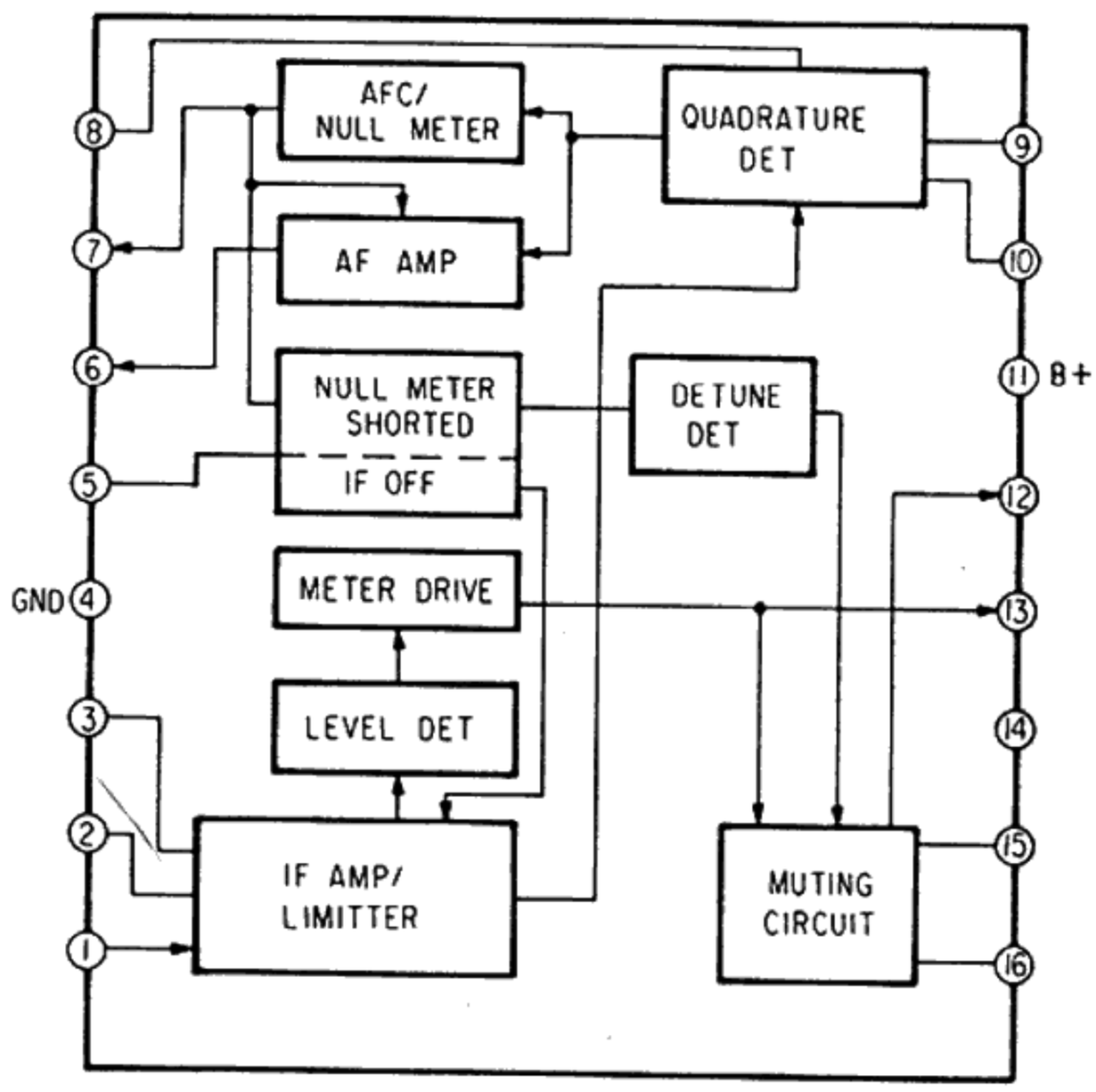

IC201

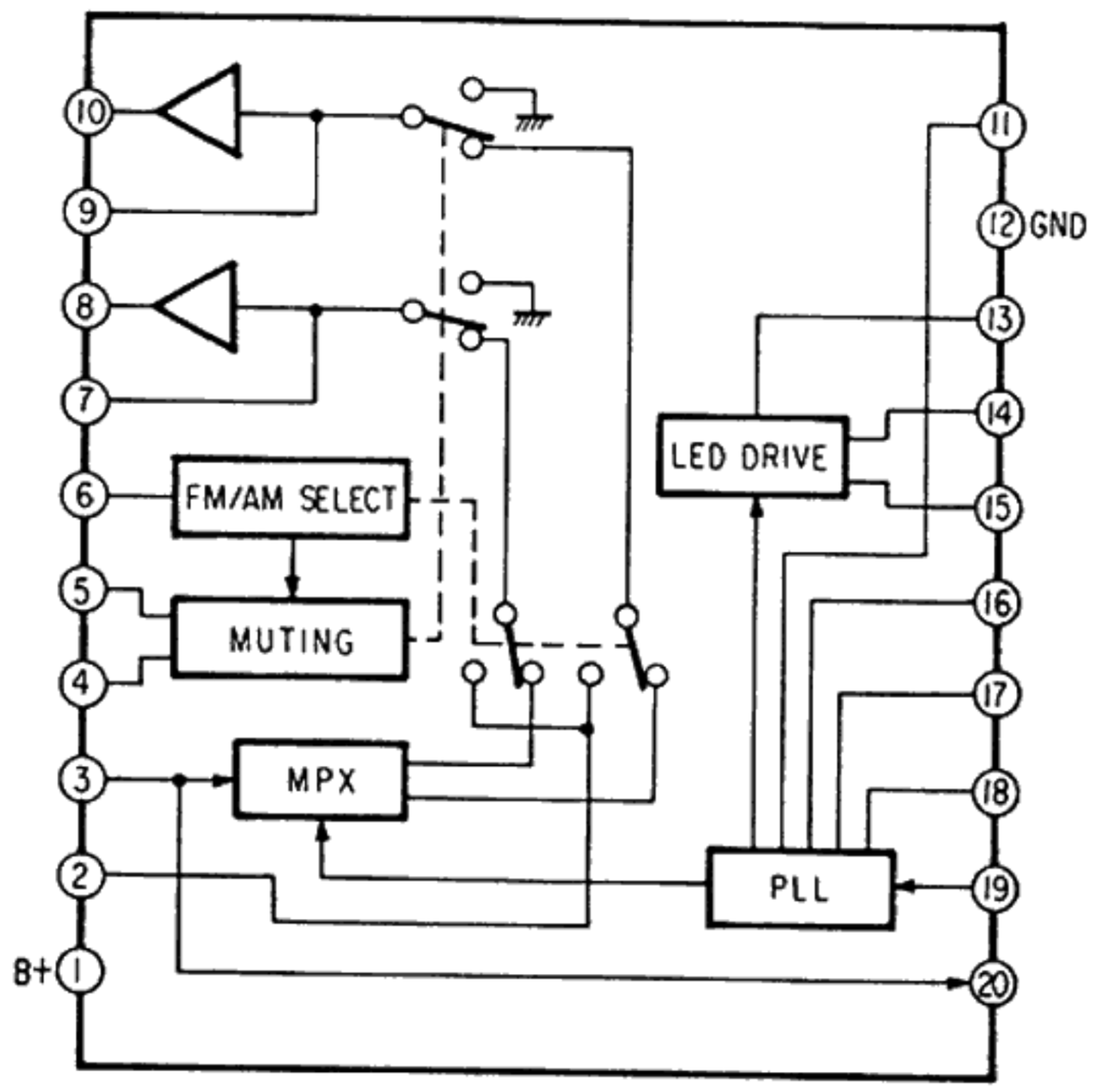

IC102

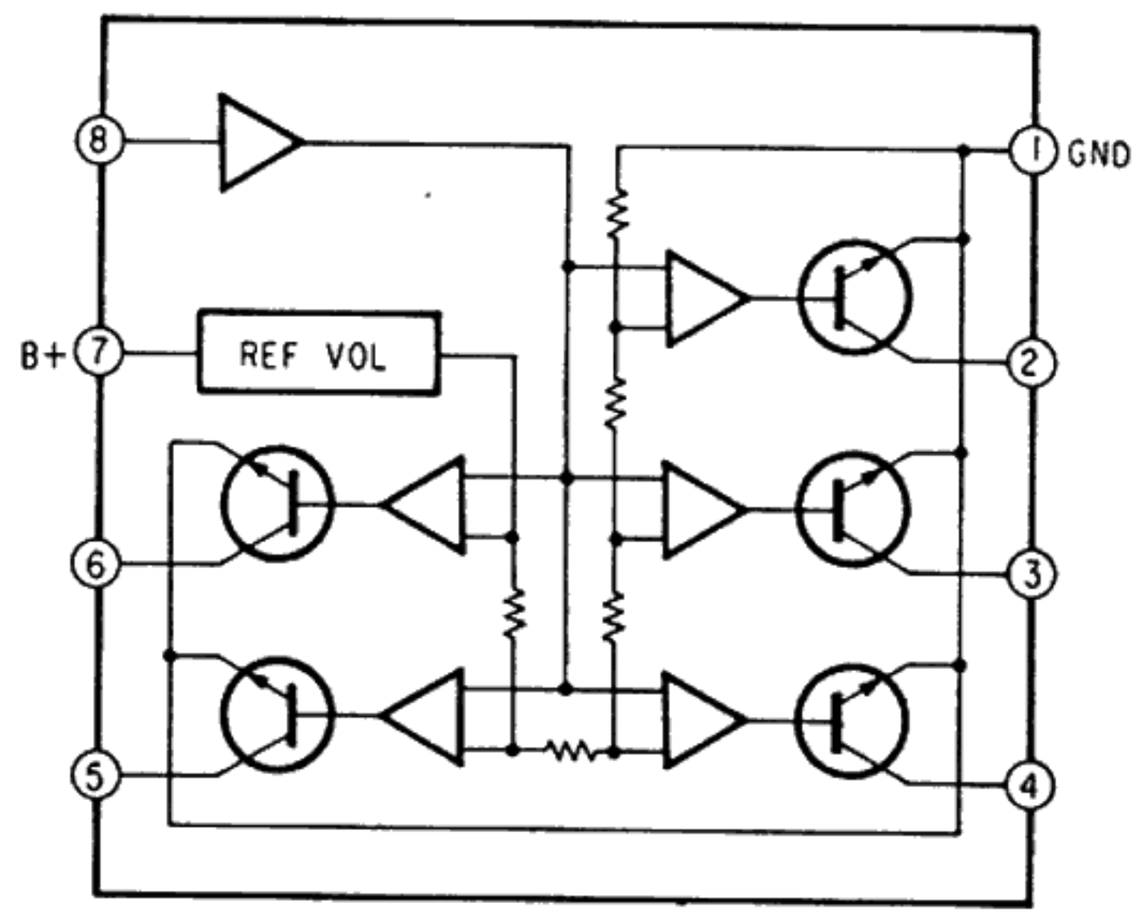

IC301

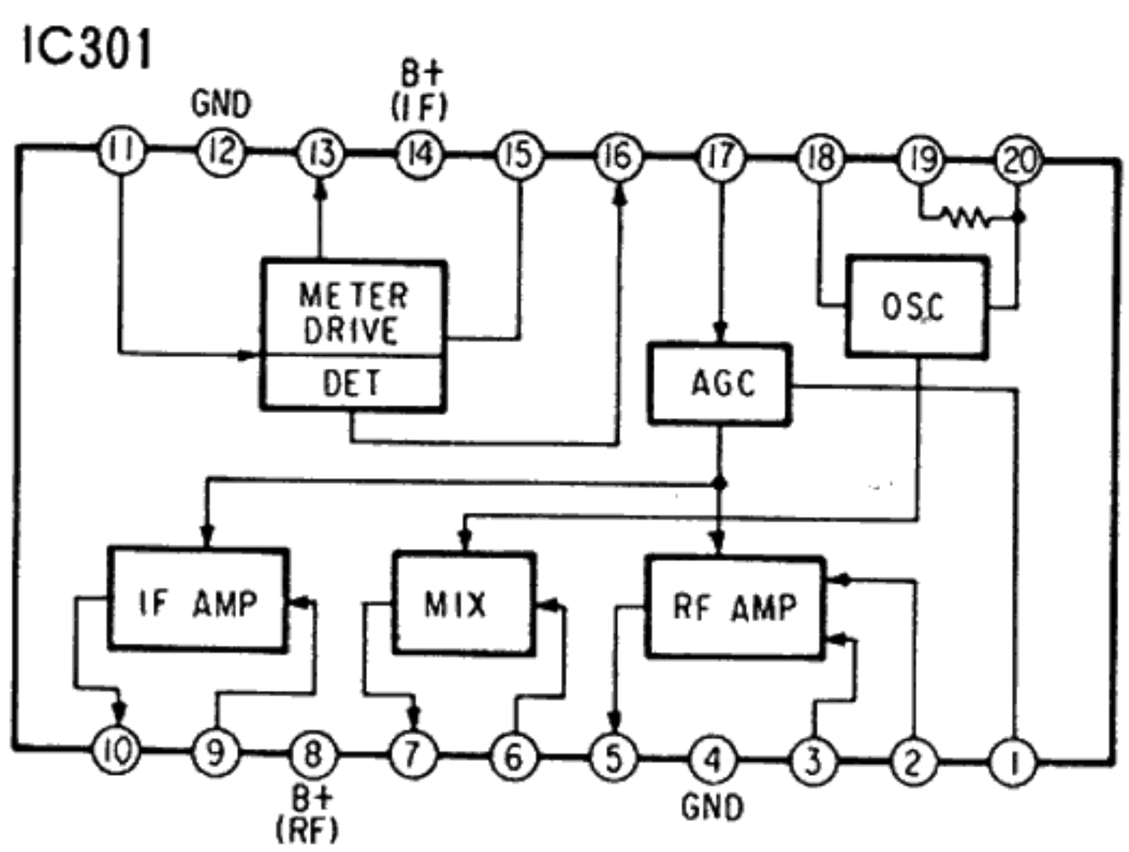

Semiconductor Lead Layout

2SA1015
2SC1364
2SC1815

2SC2839

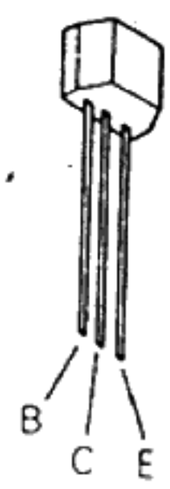

2SD880

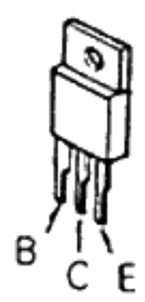

LA1235
LA1245
LA3390
TL489CP

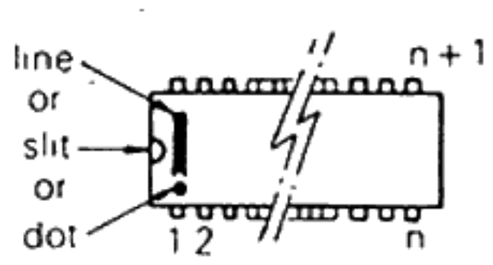

(Top view)

10E2
1S1555
1T22
1T22AM
EQA01-15R
EQB01-15

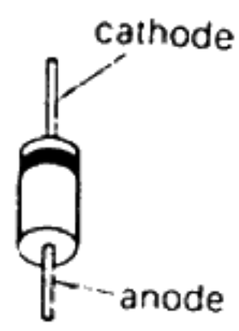

SLP141B
SLP241B

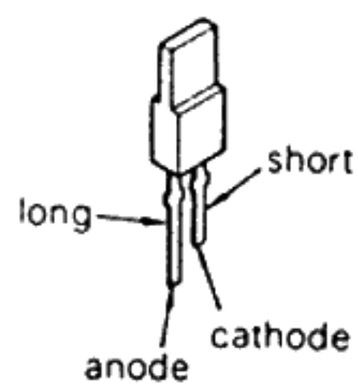

SLP252B

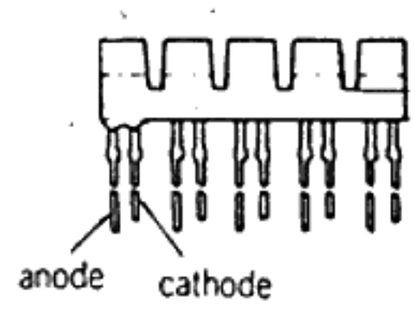

SECTION 5
EXPLODED VIEW

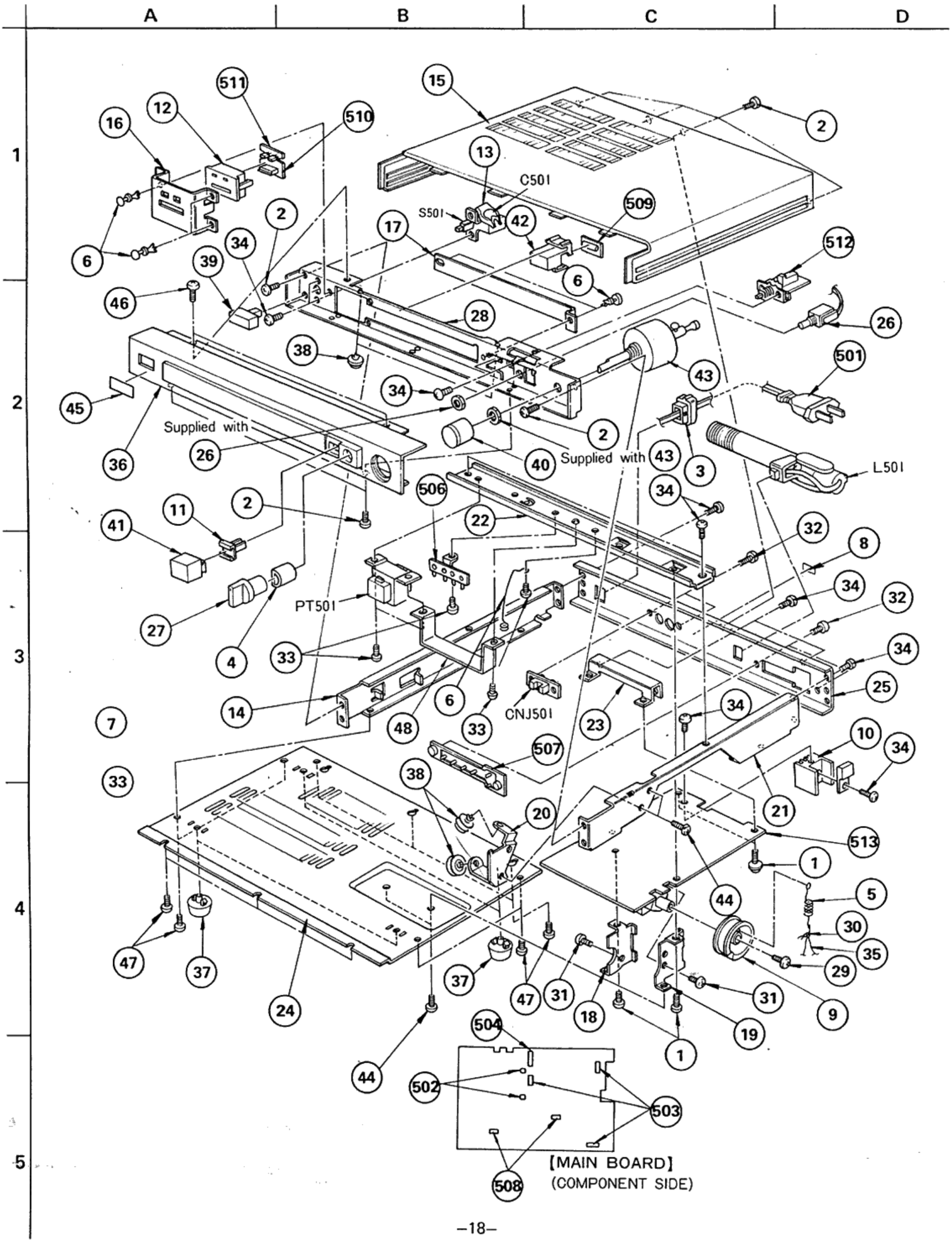

SECTION 6
ELECTRICAL PARTS LIST

GENERAL SECTION

No.	Part No.	Description
1	3-701-589-00	SCREW, SELF-TAPPING
2	3-703-108-01	SCREW +BV 3X6, S TIGHT
3	3-703-244-00	BUSHING, CORD
4	3-703-466-00	SPRING (6600)
5	4-809-050-00	SPRING, TENSION
6	4-812-134-11	RIVET NYLON, 3.5
7	♠;4-838-818-00	LEAD, CLAMP INDICATOR
8	♠;4-844-449-00	LABEL
9	4-859-586-01	DRUM (165), DIAL
10	♠;4-863-132-00	HEAT SINK (SMALL)
11	4-866-342-00	JOINT (B), KNOB
12	4-869-113-11	HOLDER, LED
13	4-869-127-00	COVER, CAPACITOR
14	♠;4-875-423-00	PLATE, SIDE
15	4-875-434-11	CASE
16	♠;4-875-805-00	HOLDER, LED
17	♠;4-875-806-00	PLATE, ORNAMENTAL
18	♠;4-875-807-00	HOLDER (L), FRONT END
19	♠;4-875-808-00	HOLDER (R), FRONT END
20	♠;4-875-809-00	BRACKET (A), PULLEY
21	♠;4-875-811-00	PLATE (R), SIDE, CHASSIS
22	♠;4-875-812-00	BRACKET, TRANSFORMER
23	♠;4-875-813-00	HOLDER, CHASSIS
24	♠;4-875-814-00	PLATE, BOTTOM
25	♠;4-875-815-21	(AEP)...PLATE, JACK
25	♠;4-875-815-31	(UK)....PLATE, JACK
26	4-875-818-00	SWITCH, BAND SELECTION
27	4-875-827-11	KNOB, BAND SELECTOR
28	♠;4-875-828-11	PANEL, SUB
29	7-621-775-10	SCREW +B 2.6X4
30	7-623-616-01	EYELET, 2X3
31	7-682-545-09	SCREW +B 3X4
32	7-685-646-11	SCREW +BVTP 3X8 TYPE2 N-S
33	7-685-870-01	SCREW +BVTT 3X5 (S)
34	7-685-871-01	SCREW +BVTT 3X6 (S)
35	9-911-825-42	STRING, 0.5MM WHITE
36	A-4322-335-A	PANEL ASSY
37	X-3701-069-0	FOOT ASSY, M.F
38	X-4864-705-0	PULLEY ASSY
39	X-4875-108-0	KNOB ASSY, POWER
40	X-4875-113-2	KNOB (DIA. 24) (A) ASSY, R
41	X-4875-803-0	KNOB (MUTING) ASSY, P
42	X-4875-804-0	POINTER ASSY
43	♠;X-4875-805-0	WHEEL ASSY, TUNING
44	7-682-547-04	SCREW +B 3X6
45	3-701-690-00	(UK)...LABEL (MADE IN JAPAN)

GENERAL SECTION

No.	Part No.	Description
46	7-685-751-00	SCREW +PTT 3X6 (S)
47	7-685-870-09	SCREW +BVTT 3X5
48	4-875-837-00	PROTECTOR, LUG TERMINAL

ACCESSORY & PACKING MATERIAL

No.	Part No.	Description
101	1-501-184-00	ANTENNA, FEADER
102	1-551-734-11	CORD, CONNECTION (RK- 74A)
103	⚠1-551-967-00	(UK)...CORD, POWER
104	3-701-630-00	BAG, POLYETHYLENE
105	3-783-623-11	MANUAL, INSTRUCTION
106	3-795-195-11	(AEP)...INSTRUCTION, DUTCH/SWEDISH
107	4-875-040-00	SHEET, PROTECTION
108	4-875-452-00	CUSHION, TOP
109	4-875-453-00	CUSHION (LEFT), LOWER
110	4-875-454-00	CUSHION (RIGHT), LOWER
111	4-875-832-00	INDIVIDUAL CARTON

NOTE:
- Items with no part number and no description are not stocked because they are seldom required for routine service.
- Items marked " ♠ " are not stocked since thev are seldom required for routine service. Some delay should be anticipated when ordering these items.
- Due to standardization, parts with part numbers (Δ-ΔΔΔ-ΔΔΔ-XX or Δ-ΔΔΔΔ-ΔΔΔ-X) may be different from those used in the set.

CAPACITORS:
- All capacitors are in μF. Common capacitors are omitted. Refer to the following lists for their part numbers. MF:μF, PF:μμF.

RESISTORS
- All resistors are in ohms. Common 1/4W, 1/8W and 1/16W carbon resistors are omitted. Refer to the following lists for their part numbers.
- F : nonflammable

The components identified by shading and mark ⚠ are critical for safety. Replace only with part number specified.

COILS
- MMH : mH, UH : μH

ELECTRICAL PARTS

Ref.No.	Part No.	Description			
501	⚠1-534-817-XX	(AEP)...CORD, POWER, EULO PLUG			
501	⚠1-551-963-00	(UK)....CORD, POWER			
502	♣;1-535-114-00	TERMINAL			
503	♣;1-535-116-00	TERMINAL			
504	♣;1-535-118-00	TERMINAL			
505	♣;1-535-149-11	WIRE (30.0MM)			
506	1-536-392-XX	L-TYPE TERMINAL STRIP			
507	1-536-663-00	TERMINAL BOARD (ANTENNA)			
508	♣;1-560-060-00	PIN, CONNECTOR 2P			
509	♣;1-605-176-00	PC BOARD, LAMP			
510	♣;1-605-177-00	PC BOARD, SIGNAL (A)			
511	♣;1-605-178-00	PC BOARD, SIGNAL (B)			
512	♣;1-605-450-00	PC BOARD, FUNCTION (A)			
513	♣;A-4351-246-A	MOUNTED PCB, MAIN			
C321	1-102-880-00	CERAMIC	15PF	5%	50V
C324	1-102-731-00	CERAMIC	62PF	5%	50V
C402	⚠1-123-508-00	ELECT	1000MF	20%	35V
C403	⚠1-106-212-00	MYLAR	0.047MF	5%	100V
C404	⚠1-106-212-00	MYLAR	0.047MF	5%	100V
C501	⚠1-161-744-00	CERAMIC	10000PF		400V
CF101	1-527-534-XX	FILTER, SOLID STATE			
CF301	1-527-599-00	FILTER, MECHANICAL			
CNJ501	1-507-699-00	JACK, PIN 2P			
CT301	1-141-179-12	CAP,TRIMMER			
CT302	1-141-179-12	CAP,TRIMMER			
CT303	1-141-171-00	CAP,TRIMMER			
CT304	1-141-171-00	CAP,TRIMMER			
D101	8-719-925-26	DIODE (LED BLOCK) SLP-252B			
D102	8-719-422-21	DIODE 1T22AM			
D103	8-719-922-41	DIODE SLP241B			
D201	8-719-900-41	DIODE SLP141B			
D202	8-719-815-55	DIODE 1S1555			
D205	8-719-815-55	DIODE 1S1555			
D206	8-719-815-55	DIODE 1S1555			
D207	8-719-815-55	DIODE 1S1555			
D208	8-719-815-55	DIODE 1S1555			
D301	8-719-815-55	DIODE 1S1555			
D302	8-719-815-55	DIODE 1S1555			
D303	8-719-815-55	DIODE 1S1555			
D401	8-719-931-15	DIODE EQB01-15			
D402	⚠8-719-200-02	DIODE 10E2			
D403	⚠8-719-200-02	DIODE 10E2			
FE101	1-463-361-00	FRONT END			
IC101	8-759-812-35	IC LA1235			
IC102	8-759-904-89	IC TL489CP			
IC201	8-759-833-90	IC LA3390			
IC301	8-759-812-45	IC LA1245			

ELECTRICAL PARTS

Ref.No.	Part No.	Description				
L301	1-407-173-XX	MICRO INDUCTOR 220UH				
L302	1-405-953-00	COIL (OSC)				
L303	1-405-954-00	COIL (OSC)				
L501	1-401-913-00	ANTENNA, FERRITE-ROD (LW/MW)				
PL101	1-518-466-00	LAMP, PILOT				
PT501	⚠1-447-006-00	TRANSFORMER, POWER				
Q101	8-729-883-92	TRANSISTOR 2SC2839				
Q102	8-729-663-47	TRANSISTOR 2SC1364				
Q103	8-729-663-47	TRANSISTOR 2SC1364				
Q104	8-729-663-47	TRANSISTOR 2SC1364				
Q201	8-729-663-47	TRANSISTOR 2SC1364				
Q202	8-729-663-47	TRANSISTOR 2SC1364				
Q203	8-729-663-47	TRANSISTOR 2SC1364				
Q204	8-729-201-52	TRANSISTOR 2SA1015				
Q401	8-729-288-02	TRANSISTOR 2SD880				
R105	⚠1-247-109-00	CARBON	120	5%	1/4W	F
R114	⚠1-247-109-00	CARBON	120	5%	1/4W	F
R126	⚠1-247-083-00	CARBON	10	5%	1/4W	F
R201	⚠1-247-109-00	CARBON	120	5%	1/4W	F
R302	⚠1-247-115-00	CARBON	220	5%	1/4W	F
R308	⚠1-247-109-00	CARBON	120	5%	1/4W	F
R401	⚠1-247-125-00	CARBON	560	5%	1/4W	F
RT101	1-226-237-00	RES, ADJ, CARBON 20K				
RT201	1-226-237-00	RES, ADJ, CARBON 20K				
RT202	1-226-236-00	RES, ADJ, CARBON 10K				
S1	1-553-764-00	SWITCH, SLIDE (1 KEY)				
S2	1-553-763-00	SWITCH, SLIDE (REMOTE TYPE)				
S501	⚠1-553-447-00	SWITCH, PUSH (AC POWER)				
T101	1-404-170-00	TRANSFORMER, IFT				
T301	1-409-348-00	COIL, MECHANICAL FILTER				

NOTE:
- Items with no part number and no description are not stocked because they are seldom required for routine service.
- Items marked " ♣ " are not stocked since thev are seldom required for routine service. Some delay should be anticipated when ordering these items.
- Due to standardization, parts with part numbers (Δ-ΔΔΔ-ΔΔΔ-XX or Δ-ΔΔΔΔ-ΔΔΔ-X) may be different from those used in the set.

CAPACITORS:
- All capacitors are in μF. Common capacitors are omitted. Refer to the following lists for their part numbers. MF:μF, PF:μμF.

RESISTORS
- All resistors are in ohms. Common 1/4W, 1/8W and 1/16W carbon resistors are omitted. Refer to the following lists for their part numbers.
- F : nonflammable

The components identified by shading and mark ⚠ are critical for safety. Replace only with part number specified.

COILS
- MMH : mH, UH : μH

ELECTROLYTIC CAPACITORS

CAP. (μF)	RATING → : Use the high voltage rated one.					
	6.3 VOLT.	10 VOLT.	16 VOLT.	25 VOLT.	35 VOLT.	50 VOLT.
	PART No.	PART No.	PART No.	PART No.	PART No.	PART No.
0.47					→	1-121-726-00
1.0					→	1-121-391-00
2.2					→	1-121-450-00
3.3	→	→	→	1-121-392-00	→	1-121-393-00
4.7	→	→	→	1-121-395-00	→	1-121-396-00
10	→	→	1-121-651-00	1-121-398-00	→	1-121-738-00
22	→	→	1-121-479-00	1-121-480-00	1-121-662-00	1-121-152-00
33	→	→	1-121-403-00	1-121-404-00	1-121-652-00	1-121-405-00
47	→	1-121-352-00	1-121-409-00	1-121-410-00	1-121-653-00	1-121-411-00
100	→	1-121-414-00	1-121-415-00	1-121-416-00	1-121-357-00	1-121-417-00
220	1-121-419-00	1-121-420-00	1-121-421-00	1-121-422-00	1-121-261-00	1-121-423-00
330	1-121-751-00	1-121-805-00	1-121-521-00	1-121-654-00	1-121-655-00	1-121-656-00
470	1-121-424-00	1-121-425-00	1-121-426-00	1-121-733-00	1-121-361-00	1-121-810-00
1000	–	1-121-736-00	1-121-245-00	1-121-657-00	1-121-388-00	1-123-061-00
2200	1-121-658-00	1-121-659-00	1-121-660-00	1-123-067-00	1-121-984-00	–
3300	1-121-661-00	1-123-075-00	1-123-071-00	–	–	–

CAP. (μF)	100 VOLT.	160 VOLT.	250 VOLT.	350 VOLT.
	PART No.	PART No.	PART No.	PART No.
0.47	–	–	–	–
1.0	1-123-249-00	1-123-252-00	1-123-003-00	1-121-168-00
2.2	1-123-250-00	1-123-026-00	–	1-123-028-00
3.3	1-121-995-00	–	1-123-004-00	1-123-006-00
4.7	1-123-255-00	1-121-246-00	1-121-759-00	1-123-007-00
10	1-121-126-00	1-121-999-00	1-123-254-00	1-123-008-00
22	1-121-996-00	1-123-253-00	1-123-005-00	1-123-022-00
33	1-121-997-00	1-121-757-00	–	–
47	1-123-251-00	1-121-919-00	–	–
100	1-123-084-00	–	–	–

CERAMIC CAPACITORS

CAP. (pF)	RATING							
	50 VOLT.	CAP. (pF)	50 VOLT.	CAP. (pF)	50 VOLT.	CAP. (μF)	50 VOLT.
	PART No.		PART No.		PART No.		PART No.
0.5	1-101-837-00	22	1-102-959-00	150	1-101-361-00	0.001	1-102-074-00
0.75	1-101-586-00	24	1-102-960-00	160	1-101-367-00	0.0012	1-102-118-00
1.0	1-102-934-00	27	1-102-961-00	180	1-102-976-00	0.0015	1-102-119-00
1.5	1-101-576-00	30	1-102-962-00	200	1-102-977-00	0.0018	1-102-120-00
2.0	1-102-935-00	33	1-102-963-00	220	1-102-978-00	0.0022	1-102-121-00
3	1-102-936-00	36	1-102-964-00	240	1-102-979-00	0.0027	1-102-122-00
4	1-102-937-00	39	1-102-965-00	270	1-102-980-00	0.0033	1-102-123-00
5	1-102-942-00	43	1-102-966-00	300	1-102-981-00	0.0039	1-102-124-00
6	1-102-943-00	47	1-101-880-00	330	1-102-820-00	0.0047	1-102-125-00
7	1-102-944-00	51	1-101-882-00	360	1-102-821-00	0.0056	1-102-126-00
8	1-102-945-00	56	1-101-884-00	390	1-102-822-00	0.0068	1-102-127-00
9	1-102-946-00	62	1-101-886-00	430	1-102-823-00	0.0082	1-102-128-00
10	1-102-947-00	68	1-101-888-00	470	1-102-824-00	0.01	1-102-129-00
11	1-102-948-00	75	1-101-890-00	510	1-101-059-00	0.022	1-101-005-00
12	1-102-949-00	82	1-102-971-00	560	1-102-115-00	0.047	1-101-006-00
13	1-102-950-00	91	1-102-972-00	680	1-102-116-00		
15	1-102-951-00	100	1-102-973-00	820	1-102-117-00		
16	1-102-952-00	110	1-102-815-00				
18	1-102-953-00	120	1-102-816-00				
20	1-102-958-00	130	1-101-081-00				

0.001μF = 1,000pF

CERAMIC (SEMICONDUCTOR) CAPACITORS

CAP. (μF)	RATING → : Use the high voltage rated one.				
	25 VOLT.	50 VOLT.	CAP. (μF)	25 VOLT.	50 VOLT.
	PART No.	PART No.		PART No.	PART No.
0.001	→	1-161-039-00	0.018	1-161-016-00	1-161-054-00
0.0012	→	1-161-040-00	0.022	1-161-017-00	1-161-055-00
0.0015		1-161-041-00	0.027	1-161-018-00	1-161-056-00
0.0018		1-161-042-00	0.033	1-161-019-00	1-161-057-00
0.0022		1-161-043-00	0.039	1-161-010-00	1-161-058-00
0.0027	→	1-161-044-00	0.047	1-161-021-00	1-161-059-00
0.0033	→	1-161-045-00	0.056	→	1-161-060-00
0.0039	→	1-161-046-00	0.068	→	1-161-061-00
0.0047	→	1-161-047-00	0.082	1-161-024-00	1-161-062-00
0.0056	→	1-161-048-00	0.1	1-161-025-00	1-161-063-00
0.0068	→	1-161-049-00			
0.0082	1-161-012-00	1-161-050-00			
0.01	1-161-013-00	1-161-051-00			
0.012	→	1-161-052-00			
0.015	1-161-015-00	1-161-053-00			

MYLAR CAPACITORS

CAP. (μF)	RATING 50 VOLT. PART No.	100 VOLT. PART No.	200 VOLT. PART No.	CAP. (μF)	50 VOLT. PART No.	100 VOLT. PART No.	200 VOLT. PART No.	CAP. (μF)	50 VOLT. PART No.	100 VOLT. PART No.	200 VOLT. PART No.
0.001	1-108-227-00	1-108-365-00	1-108-409-00	0.01	1-108-239-00	1-108-377-00	1-108-421-00	0.1	1-108-251-00	1-108-389-00	1-108-433-00
0.0012	1-108-351-00	1-108-366-00	1-108-410-00	0.012	1-108-357-00	1-108-378-00	1-108-422-00	0.12	1-108-363-00	1-108-390-00	1-108-434-00
0.0015	1-108-228-00	1-108-367-00	1-108-411-00	0.015	1-108-240-00	1-108-379-00	1-108-423-00	0.15	1-108-252-00	1-108-391-00	1-108-435-00
0.0018	1-108-352-00	1-108-368-00	1-108-412-00	0.018	1-108-358-00	1-108-380-00	1-108-424-00	0.18	1-108-364-00	1-108-392-00	1-108-436-00
0.0022	1-108-230-00	1-108-369-00	1-108-413-00	0.022	1-108-242-00	1-108-381-00	1-108-425-00	0.22	1-108-254-00	1-108-393-00	1-108-437-00
0.0027	1-108-353-00	1-108-370-00	1-108-414-00	0.027	1-108-359-00	1-108-382-00	1-108-426-00	0.27	1-108-854-00	–	–
0.0033	1-108-232-00	1-108-371-00	1-108-415-00	0.033	1-108-244-00	1-108-383-00	1-108-427-00	0.33	1-108-855-00	–	–
0.0039	1-108-354-00	1-108-372-00	1-108-416-00	0.039	1-108-360-00	1-108-384-00	1-108-428-00	0.39	1-108-856-00	–	–
0.0047	1-108-234-00	1-108-373-00	1-108-417-00	0.047	1-108-246-00	1-108-385-00	1-108-429-00	0.47	1-108-857-00	–	–
0.0056	1-108-355-00	1-108-374-00	1-108-418-00	0.056	1-108-361-00	1-108-386-00	1-108-430-00				
0.0068	1-108-237-00	1-108-375-00	1-108-419-00	0.068	1-108-249-00	1-108-387-00	1-108-431-00				
0.0082	1-108-356-00	1-108-376-00	1-108-420-00	0.082	1-108-362-00	1-108-388-00	1-108-432-00				

TANTALUM CAPACITORS

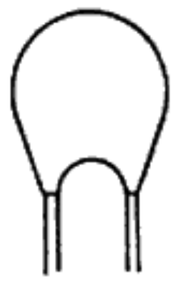

CAP. (μF)	RATING 3.15 VOLT. PART No.	6.3 VOLT. PART No.	10 VOLT. PART No.	16 VOLT. PART No.	20 VOLT. PART No.	25 VOLT. PART No.	35 VOLT. PART No.
					→ : Use the high voltage rated one.		
0.01					→	→	1-131-396-00
0.015						→	1-131-397-00
0.022						→	1-131-398-00
0.033						→	1-131-399-00
0.047						→	1-131-400-00
0.068					→	→	1-131-401-00
0.1					→	→	1-131-402-00
0.15					→	→	1-131-403-00
0.22					→	→	1-131-404-00
0.33					→	1-131-409-00	1-131-405-00
0.47	–	–	–	–	1-131-412-00	→	1-131-406-00
0.68	–	–	–	1-131-415-00	→	1-131-410-00	1-131-407-00
1.0	–	–	1-131-418-00	–	1-131-413-00	→	1-131-408-00
1.5	–	1-131-421-00	–	1-131-416-00	→	1-131-411-00	1-131-348-00
2.2	1-131-424-00	–	1-131-419-00	–	1-131-414-00	1-131-355-00	1-131-349-00
3.3	–	1-131-422-00	–	1-131-417-00	1-131-362-00	1-131-356-00	1-131-350-00
4.7	1-131-425-00	–	1-131-420-00	1-131-369-00	1-131-363-00	1-131-357-00	1-131-351-00
6.8	–	1-131-423-00	1-131-376-00	1-131-370-00	1-131-364-00	1-131-358-00	1-131-352-00
10	1-131-426-00	1-131-383-00	1-131-377-00	1-131-371-00	1-131-365-00	1-131-359-00	1-131-353-00
15	1-131-390-00	1-131-384-00	1-131-378-00	1-131-372-00	1-131-366-00	1-131-360-00	–
22	1-131-391-00	1-131-385-00	1-131-379-00	1-131-373-00	1-131-367-00		
33	1-131-392-00	1-131-386-00	1-131-380-00	1-131-374-00			
47	1-131-393-00	1-131-387-00	1-131-381-00	–			
68	1-131-394-00	1-131-388-00	–	–			
100	1-131-395-00	–	–	–			

TANTALUM CAPACITORS

CAP. (μF)	RATING 3 VOLT. PART No.	6.3 VOLT. PART No.	10 VOLT. PART No.	16 VOLT. PART No.	20 VOLT. PART No.	35 VOLT. PART No.
0.033						1-131-273-00
0.047						1-131-274-00
0.068						1-131-275-00
0.1						1-131-276-00
0.15						1-131-277-00
0.22			–	–	1-131-262-00	1-131-278-00
0.33			–	–	1-131-263-00	1-131-279-00
0.47			1-131-169-00	–	1-131-264-00	1-131-280-00
0.68			–	1-131-258-00	1-131-265-00	1-131-281-00
1.0			1-131-254-00	–	1-131-266-00	1-131-282-00
1.5		1-131-250-00	–	–	1-131-267-00	1-131-283-00
2.2		–	–	1-131-259-00	1-131-268-00	1-131-284-00
3.3		–	1-131-255-00	–	1-131-269-00	–
4.7		1-131-251-00	1-131-171-00	–	1-131-270-00	–
6.8		–	–	1-131-260-00	1-131-271-00	–
10	–	–	1-131-256-00	–	1-131-272-00	–
15	–	1-131-252-00	–	1-131-261-00		
22	–	–	1-131-257-00	–		
33	1-131-176-00	1-131-253-00	1-131-173-00	–		
47	1-131-288-00	1-131-174-00	–			
100	1-131-177-00					

1/4 WATT CARBON RESISTORS

Ω	Part No.	Ω	Part No.	Ω	Part No.	Ω	Part No.	Ω	Part No.	Ω	Part No.	Ω	Part No.
1.0	1-246-401-00	10	1-246-425-00	100	1-246-449-00	1.0k	1-246-473-00	10k	1-246-497-00	100k	1-246-521-00	1.0M	1-246-545-00
1.1	1-246-402-00	11	1-246-426-00	110	1-246-450-00	1.1k	1-246-474-00	11k	1-246-498-00	110k	1-246-522-00	1.1M	1-210-814-00
1.2	1-246-403-00	12	1-246-427-00	120	1-246-451-00	1.2k	1-246-475-00	12k	1-246-499-00	120k	1-246-523-00	1.2M	1-210-815-00
1.3	1-246-404-00	13	1-246-428-00	130	1-246-452-00	1.3k	1-246-476-00	13k	1-246-500-00	130k	1-246-524-00	1.3M	1-210-816-00
1.5	1-246-405-00	15	1-246-429-00	150	1-246-453-00	1.5k	1-246-477-00	15k	1-246-501-00	150k	1-246-525-00	1.5M	1-210-817-00
1.6	1-246-406-00	16	1-246-430-00	160	1-246-454-00	1.6k	1-246-478-00	16k	1-246-502-00	160k	1-246-526-00	1.6M	1-210-818-00
1.8	1-246-407-00	18	1-246-431-00	180	1-246-455-00	1.8k	1-246-479-00	18k	1-246-503-00	180k	1-246-527-00	1.8M	1-210-819-00
2.0	1-246-408-00	20	1-246-432-00	200	1-246-456-00	2.0k	1-246-480-00	20k	1-246-504-00	200k	1-246-528-00	2.0M	1-210-820-00
2.2	1-246-409-00	22	1-246-433-00	220	1-246-457-00	2.2k	1-246-481-00	22k	1-246-505-00	220k	1-246-529-00	2.2M	1-210-821-00
2.4	1-246-410-00	24	1-246-434-00	240	1-246-458-00	2.4k	1-246-482-00	24k	1-246-506-00	240k	1-246-530-00	2.4M	1-244-754-00
2.7	1-246-411-00	27	1-246-435-00	270	1-246-459-00	2.7k	1-246-483-00	27k	1-246-507-00	270k	1-246-531-00	2.7M	1-244-755-00
3.0	1-246-412-00	30	1-246-436-00	300	1-246-460-00	3.0k	1-246-484-00	30k	1-246-508-00	300k	1-246-532-00	3.0M	1-244-756-00
3.3	1-246-413-00	33	1-246-437-00	330	1-246-461-00	3.3k	1-246-485-00	33k	1-246-509-00	330k	1-246-533-00	3.3M	1-244-757-00
3.6	1-246-414-00	36	1-246-438-00	360	1-246-462-00	3.6k	1-246-486-00	36k	1-246-510-00	360k	1-246-534-00	3.6M	1-244-758-00
3.9	1-246-415-00	39	1-246-439-00	390	1-246-463-00	3.9k	1-246-487-00	39k	1-246-511-00	390k	1-246-535-00	3.9M	1-244-759-00
4.3	1-246-416-00	43	1-246-440-00	430	1-246-464-00	4.3k	1-246-488-00	43k	1-246-512-00	430k	1-246-536-00	4.3M	1-244-760-00
4.7	1-246-417-00	47	1-246-441-00	470	1-246-465-00	4.7k	1-246-489-00	47k	1-246-513-00	470k	1-246-537-00	4.7M	1-244-761-00
5.1	1-246-418-00	51	1-246-442-00	510	1-246-466-00	5.1k	1-246-490-00	51k	1-246-514-00	510k	1-246-538-00	5.1M	1-244-762-00
5.6	1-246-419-00	56	1-246-443-00	560	1-246-467-00	5.6k	1-246-491-00	56k	1-246-515-00	560k	1-246-539-00		
6.2	1-246-420-00	62	1-246-444-00	620	1-246-468-00	6.2k	1-246-492-00	62k	1-246-516-00	620k	1-246-540-00		
6.8	1-246-421-00	68	1-246-445-00	680	1-246-469-00	6.8k	1-246-493-00	68k	1-246-517-00	680k	1-246-541-00		
7.5	1-246-422-00	75	1-246-446-00	750	1-246-470-00	7.5k	1-246-494-00	75k	1-246-518-00	750k	1-246-542-00		
8.2	1-246-423-00	82	1-246-447-00	820	1-246-471-00	8.2k	1-246-495-00	82k	1-246-519-00	820k	1-246-543-00		
9.1	1-246-424-00	91	1-246-448-00	910	1-246-472-00	9.1k	1-246-496-00	91k	1-246-520-00	910k	1-246-544-00		

HARDWARE NOMENCLATURE

Screw: – P 3 x 10

- *L: Length in mm*
- *D: Diameter in mm*
- *Type of head*
- *Indicated slotted-head only. Unless otherwise indicated, it means cross-recessed head (Phillips type).*

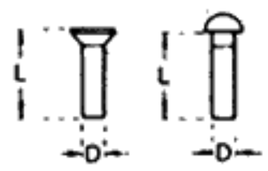

Nut, Washer, Retaining ring: N 3

- *Diameter of usable screw or shaft*
- *Reference designation*

Reference Designation	Shape	Description	Remarks
		SCREWS	
P		pan-head screw	binding-head (B) screw for replacement
PWH		pan-head screw with washer face	binding-head (B) screw and flat washer for replacement
PS PSP		pan-head screw with spring washer	binding-head (B) screw and spring washer for replacement
PSW PSPW		pan-head screw with spring and flat washers	binding-head (B) screw and spring and flat washers for replacement
R		round-head screw	binding-head (B) screw for replacement
K		flat-countersunk-head screw	
RK		oval-countersunk-head screw	
B		binding-head screw	
T		truss-head screw	binding-head (B) screw for replacement
F		flat-fillister-head screw	
RF		fillister-head screw	
BV		braizer-head screw	

Reference Designation	Shape	Description	Remarks
		SELF-TAPPING SCREWS	
TA		self-tapping screw	ex: TA, P 3 x 10
PTP		pan-head self-tapping screw	binding-head self-tapping (TA, B) screw for replacement
PTPWH		pan-head self-tapping screw with washer face	binding-head self tapping (TA, B) screw and flat washer for replacement
PTTWH		pan-head thread-rolling screw with washer face	binding-head (B) screw and flat washer for replacement
		SET SCREWS	
SC		set screw	
SC		hexagon-socket set screw	ex: SC 2.6 x 4, hexagon socket
		NUT	
N		nut	
		WASHERS	
W		flat washer	
SW		spring washer	
LW		internal-tooth lock washer	ex: LW3, internal
LW		external-tooth lock washer	ex: LW3, external
		RETAINING RINGS	
E		retaining ring	
G		grip-type retaining ring	